NOVA GRUP

gearing up your business

Products

www.novagrup.ro

NOVA GRUP
gearing up your business

The Romanian Group of Companies NOVA was established in 1994, as a family owned business located in Cugir, an industrial town with a tradition in steel machining of 200 years.

Our core activities have been dedicated over more than 15 years to gears and fine mechanics. The complexity of the products and services provided by Nova has achieved a high level in the last years, due to our increasing interest in creating modern and up-to-date premises, governed by competent management, skilled and trained staff, all linked by ISO 9001 certified processes.

Our interest for continuous improvement was bound by the highly technical customers' requirements; thus, we started to manufacture parts, then subassemblies and assemblies by clients documentation.

In 2008, our strategic objective has been oriented on development of new products, NOVA branded products after our internal documentation. Thus, we allocated resources for research and then for product development. As a consequence of our efforts, NOVA currently produces tool holders for CNC lathes and vices for CNC milling machines ,gears, gear-boxes and more.

Committed to evolution, we propose further developing by expanding the range of clamping systems made by NOVA GRUP.

HEXAGON
TÜVRheinland
CERTIFIED
Management System
ISO 9001:2015
www.tuv.com
ID 9105023858

NOVA GRUP

NOVA GRUP

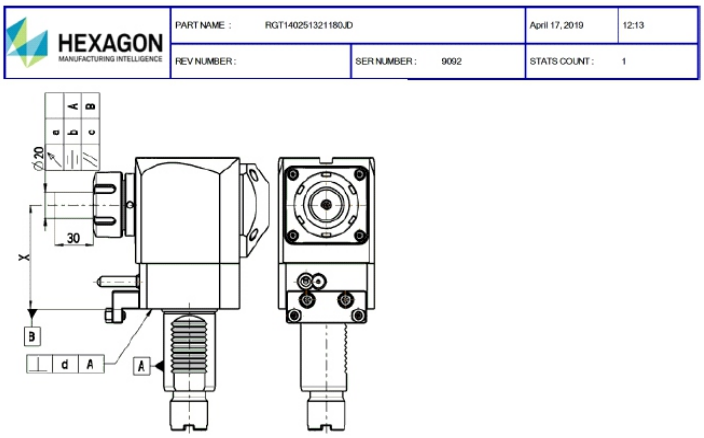
HEXAGON
MANUFACTURING INTELLIGENCE
PART NAME : RGT140251321180JD
April 17, 2019
12:13
REV NUMBER :
SER NUMBER : 9002
STATS COUNT : 1
Ø20
30
X
B
A

BURRI

CMX 50 U

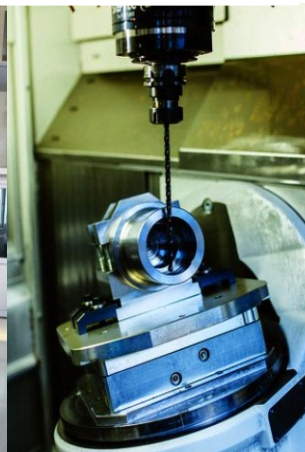

LIVE TOOLHOLDER SYMBOLIZATION

NOVA GRUP
gearing up your business

	TURRET DATA			PRODUCT TYPE	COUPLING TYPE	TOOL GRIP			INTERNAL COOLING	ONLY FOR ANGULAR OFFSET STRAIGHT OFFSET ANGULAR		DETAILS CODE
	TYPE		D(mm)			TYPE		DIMENSION		DIRECTION	H (mm)	
NGT	1	–	40	/ 2	5	1	–	32	/ 2	. 2	– 80	A

TYPE

1 - VDI

2 - BMT

D(mm)

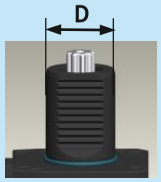

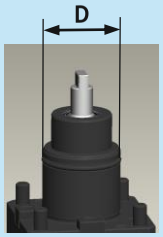

PRODUCT TYPE

1 - STRAIGHT

2 - ANGULAR

3 - OFFSET STRAIGHT

4 - OFFSET ANGULAR

5 - VARIABLE ANGLE

COUPLING TYPE

1 - DIN 5482

2 - DIN 1809

3 - DIN 5480

4 - TOEM

5 - STEPPED

TOOL GRIP – TYPE

1 - COLLET

2 - WELDON

3 - SHELL MILL ARBOR

TOOL GRIP – DIMENSION

SIZE

COLLET
16/25/32/40

WELDON
upon request

SHELL MILL ARBOR
upon request

INTERNAL COOLING

1 - NO

2 - YES
(max 20 bar)

ONLY FOR ANGULAR OFFSET STRAIGHT OFFSET ANGULAR – DIRECTION

1 - RIGHT

2 - LEFT

3 - RIGHT&LEFT

ONLY FOR ANGULAR OFFSET STRAIGHT OFFSET ANGULAR – H (mm)

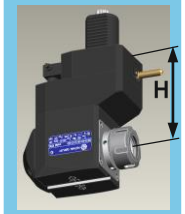

DETAILS CODE

See details code table

Please check the pages no. 3-4

Example: NGT1- 40/251-32/2.2-80A

Details code	Technical details	
(1:2)	Ratio 1:2	n_1=6000r/min (in) n_2=12000r/min (out)
(2:1)	Ratio 2:1	n_2=6000r/min (in) n_1=3000r/min (out)

Details code	Technical details	
JA	VDI30 OKUMA	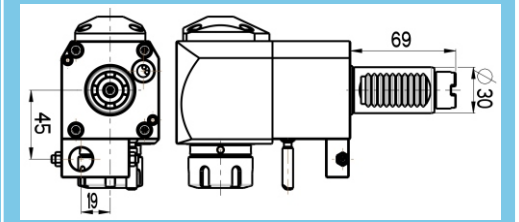
JB	VDI30 OKUMA	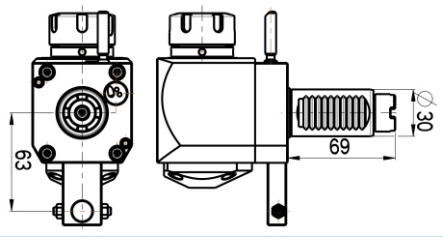
JA	VDI40 OKUMA	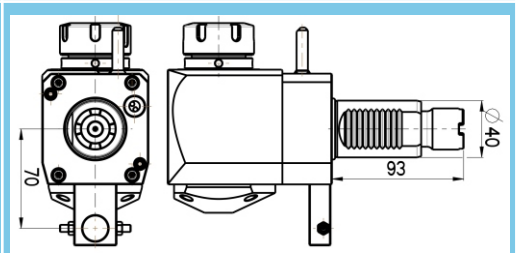
JAS	VDI40 OKUMA same direction (in-out)	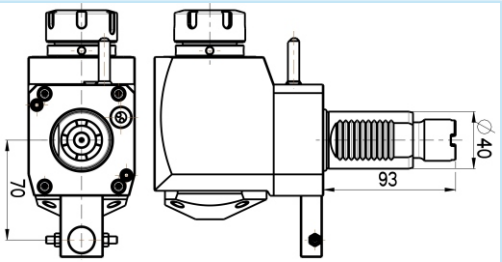

Details code	Technical details	
JB	VDI40 OKUMA	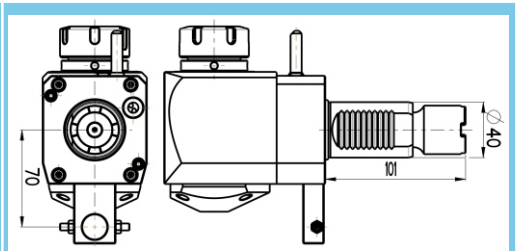
JC	VDI40 OKUMA	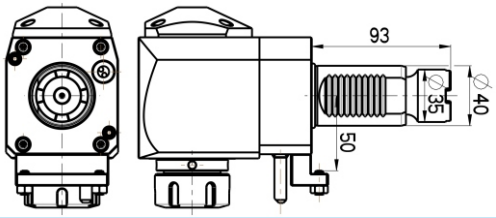
JD	VDI40 OKUMA	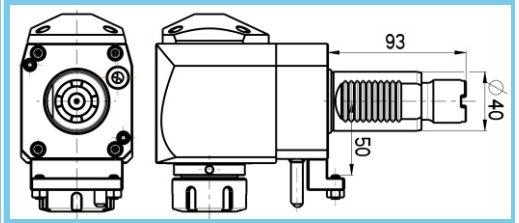
JE	VDI40 OKUMA	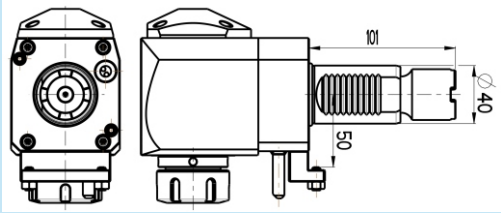
B	VDI30 DIN1809	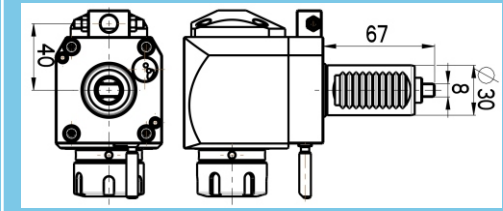

Details code	Technical details	
C	VDI30 DIN1809	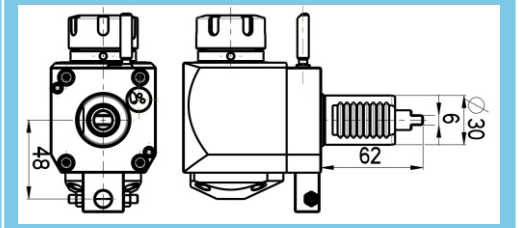
D	VDI30 DIN1809	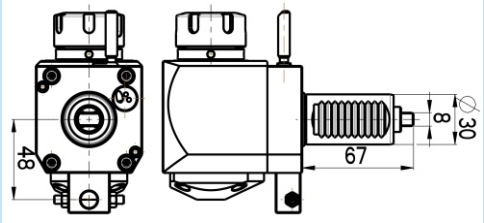
S	VDI40 (short)	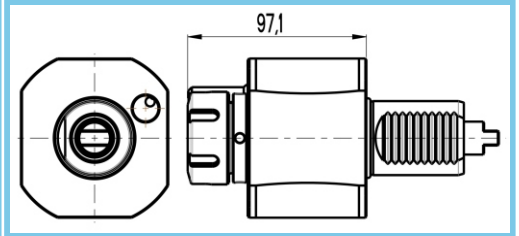
D	VDI40 TOEM	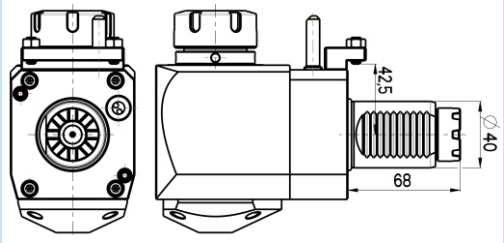
A	VDI40 HAAS	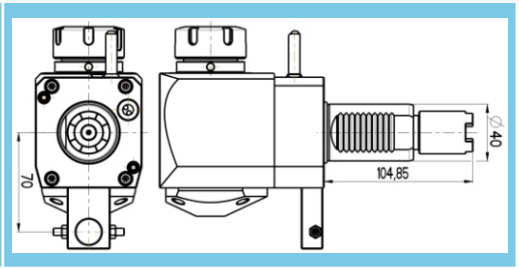

Details code		Technical details
AS	VDI40 HAAS same direction (in-out)	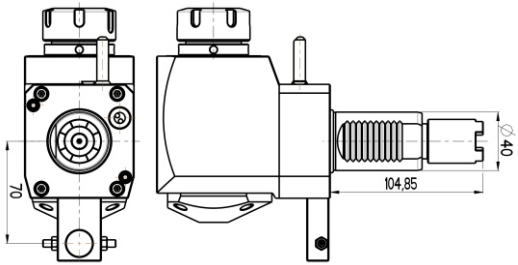
B	VDI40 HAAS	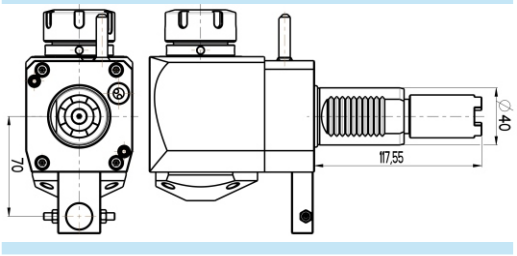
BS	VDI40 HAAS same direction (in-out)	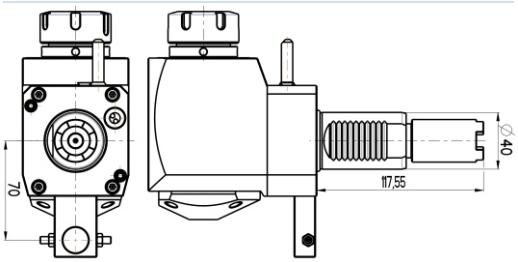
C	VDI40 HAAS	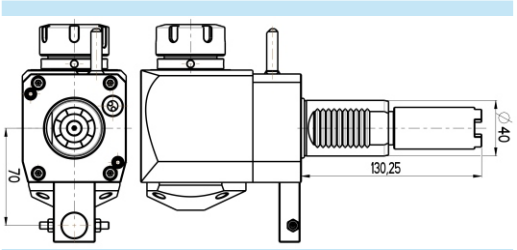
CS	VDI40 HAAS same direction (in-out)	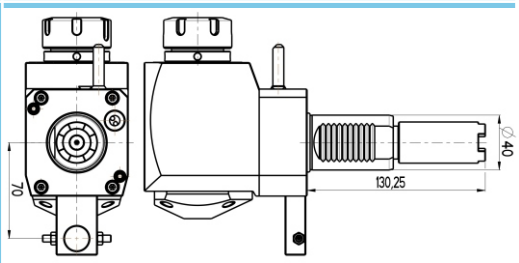

Details code		Technical details
(JA)	BMT60 OKUMA	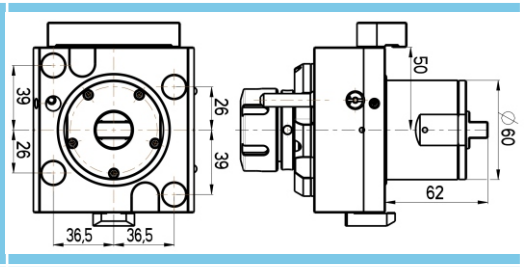
(JB)	BMT60 OKUMA	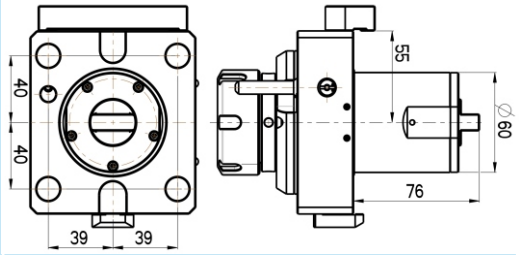
(MS)	BMT60 MORI -SEIKI	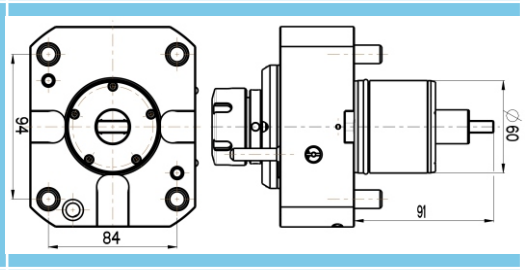
(DO)	BMT45 DOOSAN	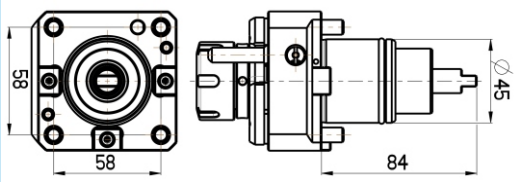
(DO)	BMT55 DOOSAN	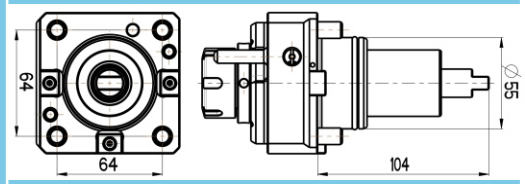

Details code		Technical details
(DO)	BMT65 DOOSAN	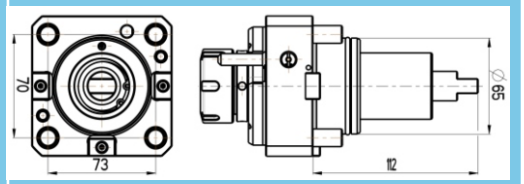
(NT)	BMT44 NAKAMURA -TOME	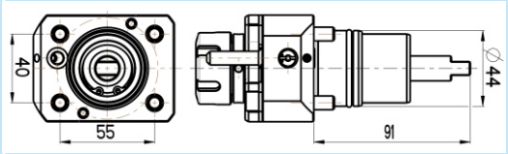
(NT)	BMT55 NAKAMURA -TOME	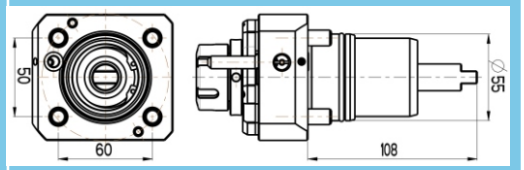
(NT)	BMT65 NAKAMURA -TOME	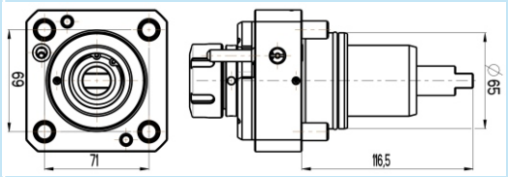

Operations with VDI Disk-type turret

Axial operation

Straight tool holder

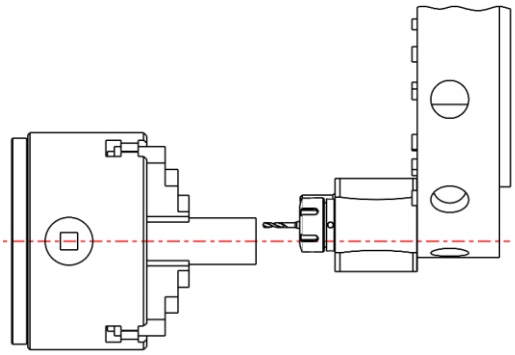

Radial operation

Angular tool holder
90º angle

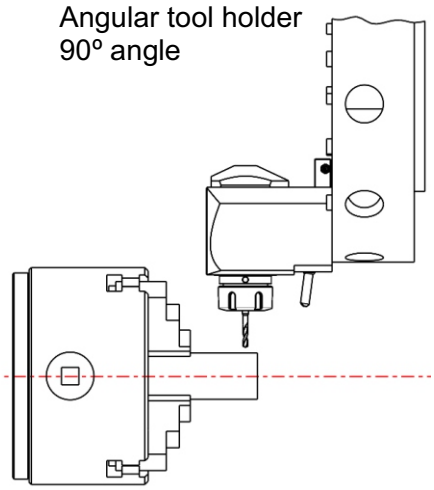

Right and Left hand versions on Disk-type Turrets

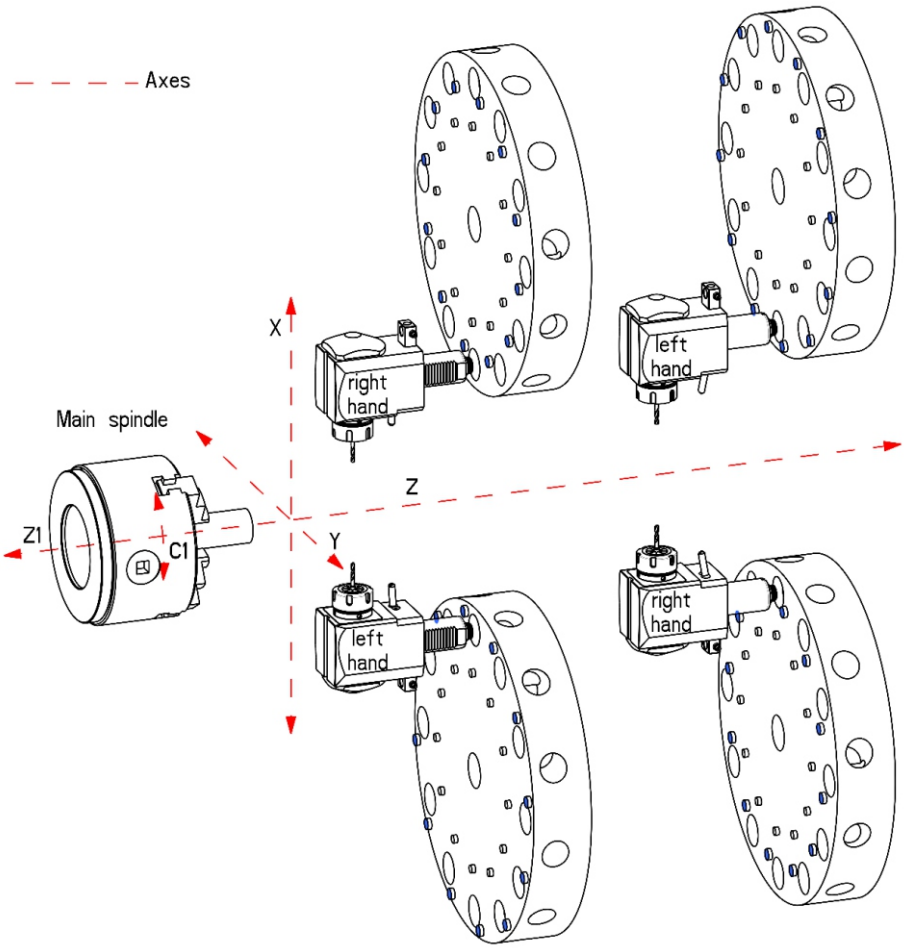

Operations with VDI Star-type turret

Axial operation

Angular tool holder
90º angle

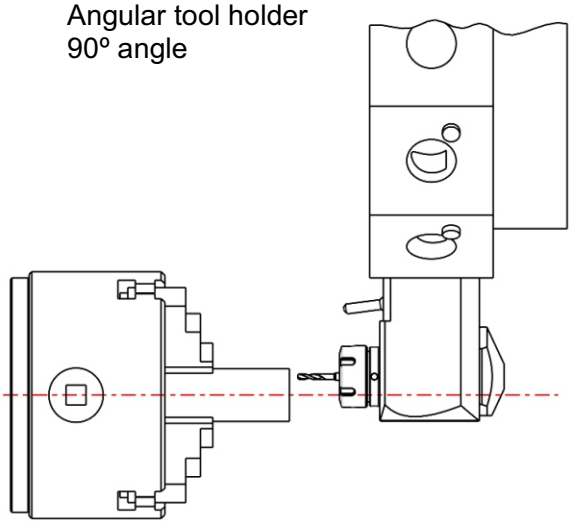

Radial operation

Straight tool holder

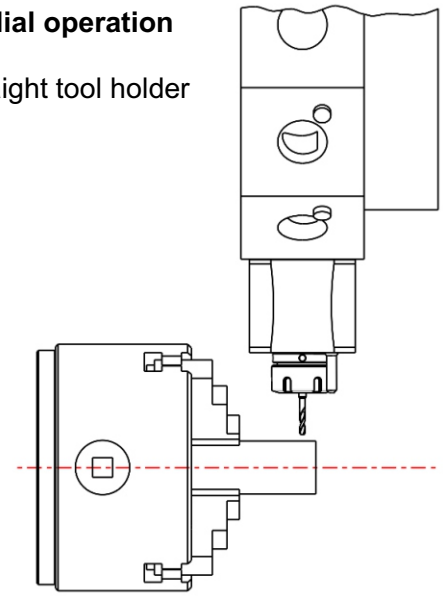

Right and Left hand versions on Star-type Turrets with Main and Sub spindle

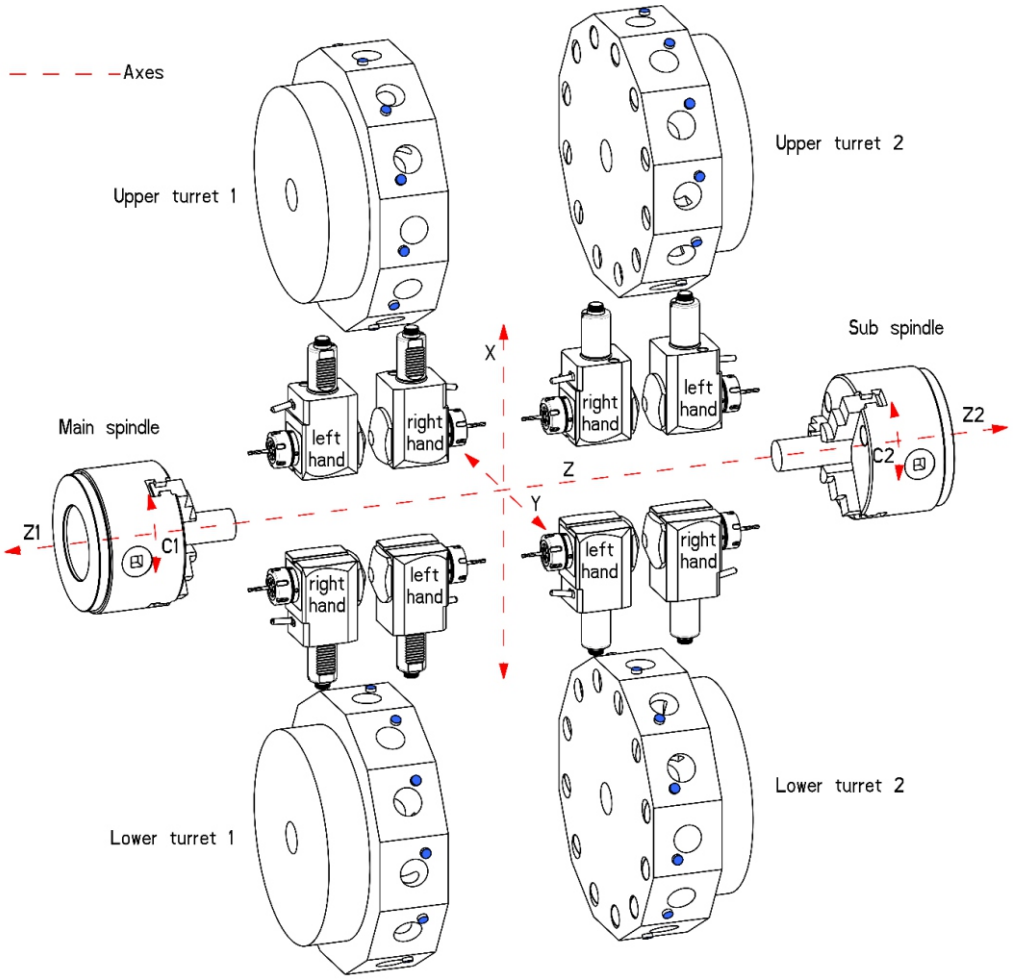

BMT TURRET TOOLHOLDERS

Suitable for:

DOOSAN
HAAS BMT & BOT
NAKAMURA-TOME
OKUMA
MORI SEIKI
HYUNDAI WIA
HARDINGE
VICTOR
HWACHEON

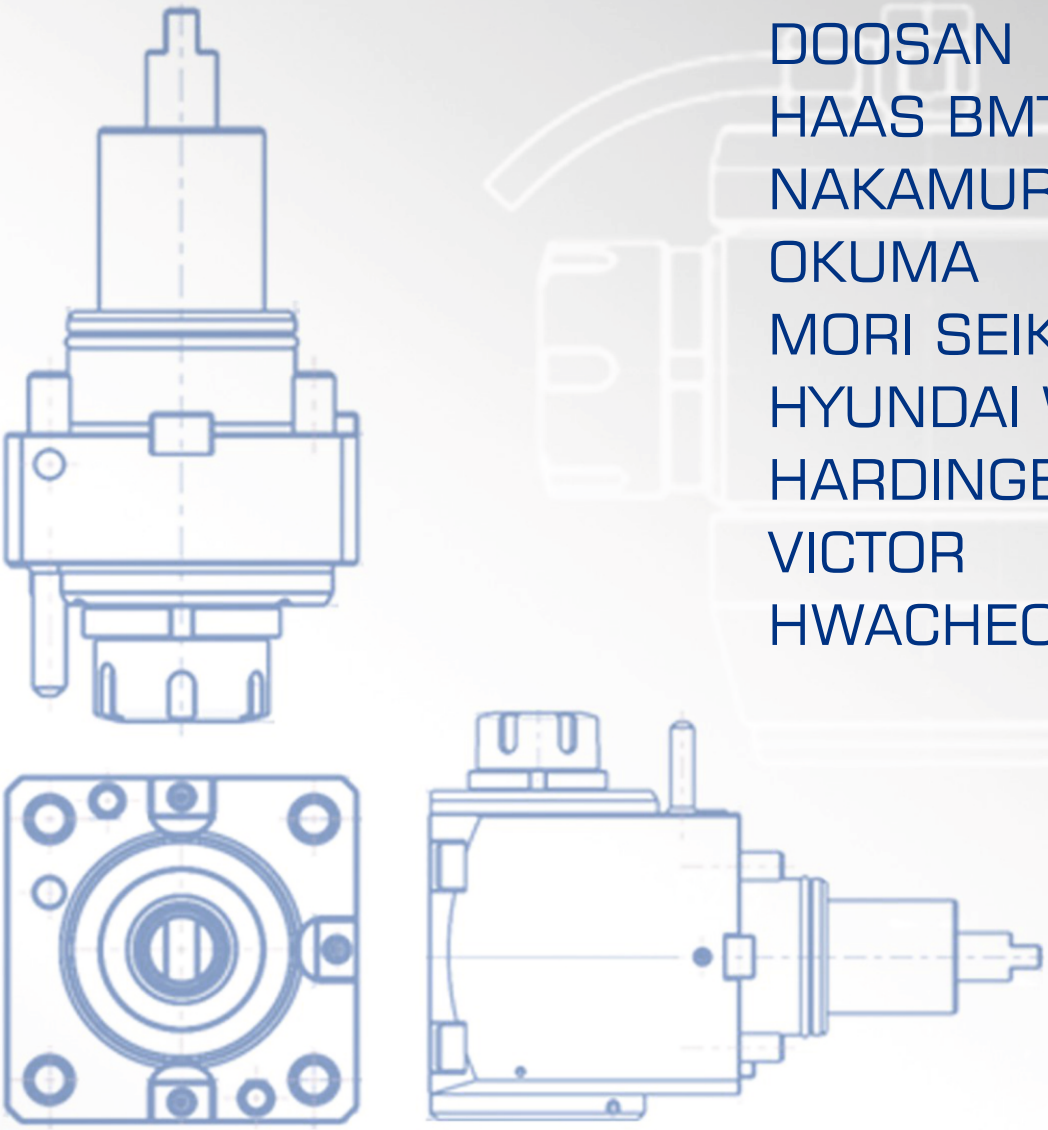

LIVE AND STATIC TOOLHOLDERS BMT45

Doosan	Lynx 2100 MA
	Lynx 220 LMSA/LMSC
	Lynx 220 LSYA/LSYC
	Lynx 220 M/LM
	PUMA 230/240/280 (M,LM,S)
	Lynx 220 MA/LMA/MC/LMC
	Lynx 220 YA/YC/LYA/LYC
	PUMA MX 1600 T/ST
Hardinge	BMT45

CONNECTION TURRET - BMT45

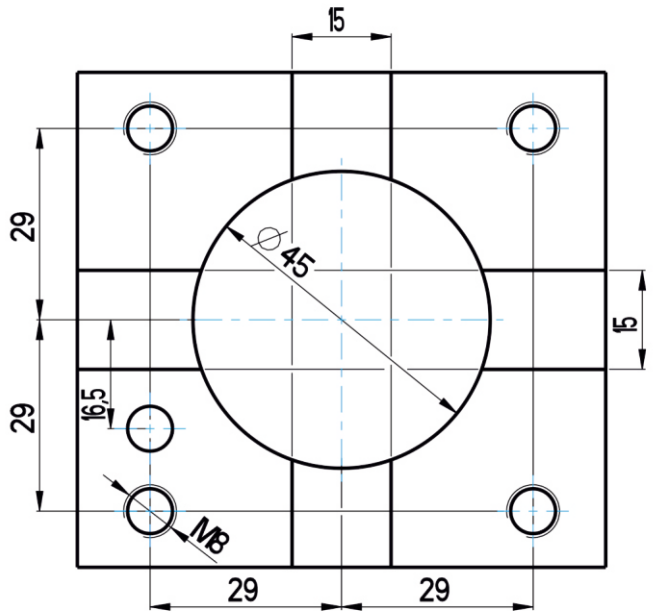

LIVE TOOLHOLDERS BMT45

Straight BMT drilling and milling head

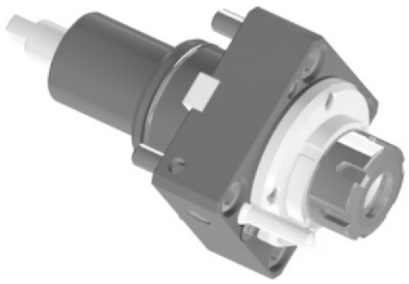

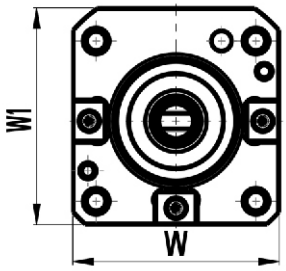

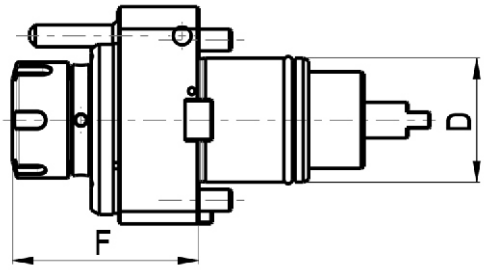

Code	D	Tool grip	Internal Cooling	F	W	W1	Torque [Nm]	Speed [rpm]	Ratio	P [bar]
NGT2-45/101-25/1(DO)	45	ER25	no	68	75	78.5	50	6000	1:1	-
NGT2-45/101-25/2(DO)	45	ER25	yes	68	75	78.5	50	6000	1:1	20

Angular BMT drilling and milling head

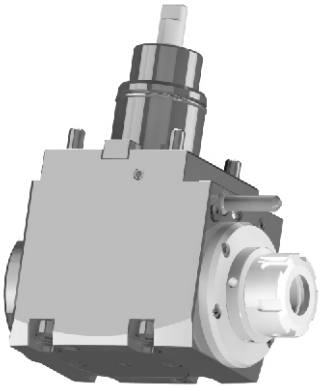

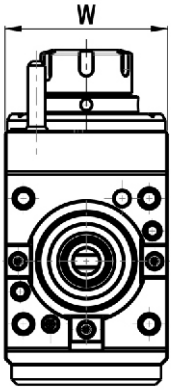

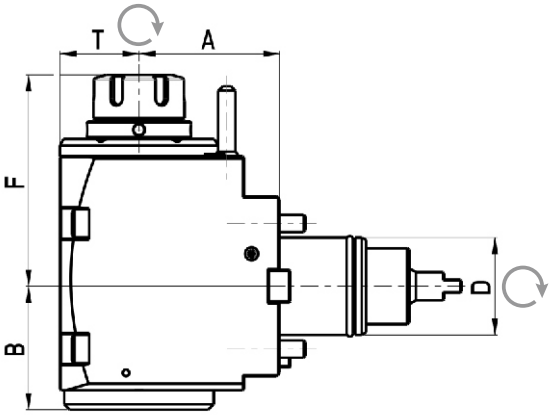

Code	D	Tool grip	Internal Cooling	Direction	A	B	F	T	W	Torque [Nm]	Speed [rpm]	Ratio	P [bar]
NGT2-45/201-25/1.3-65(DO)	45	ER25	no	right/left	65	57	98	36.5	75	50	6000	1:1	-
NGT2-45/201-25/2.3-65(DO)	45	ER25	yes	right/left	65	57	98	36.5	75	50	6000	1:1	20

* The straight, angular and variable toolholders can be equipped with Weldon shaft or shell-mill shaft upon request.

STATIC TOOLHOLDERS BMT45

Universal turning holder

NGT OD-45x20x65(DO)
External cooling

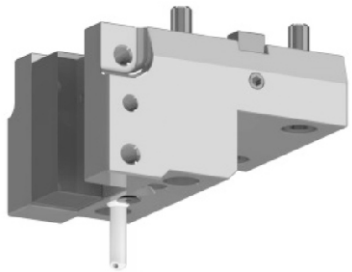

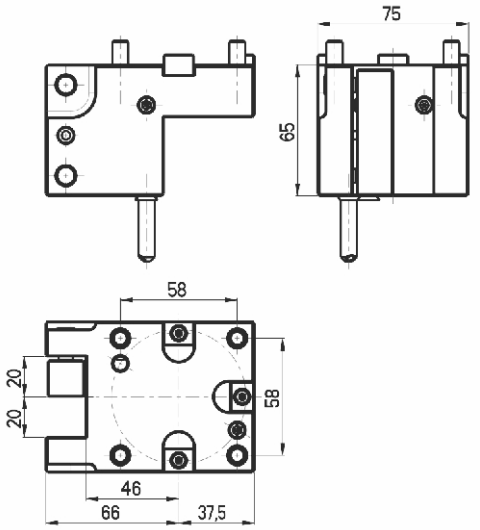

Universal turning face holder

NGT F-45x20x65(DO)
External cooling

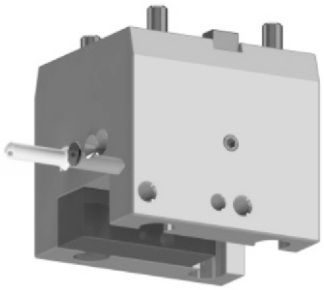

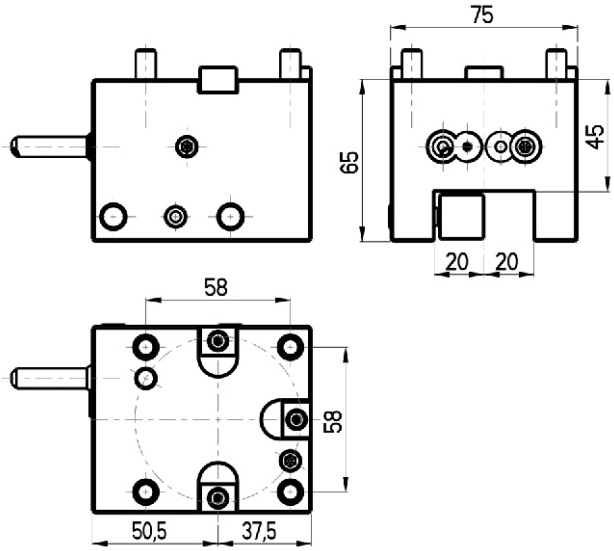

Boring bar holder

NGT ID-45x40x65(DO)
External/Internal cooling

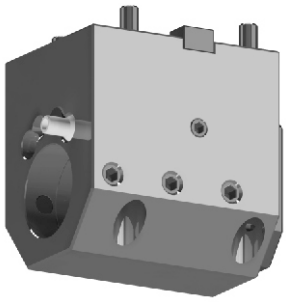

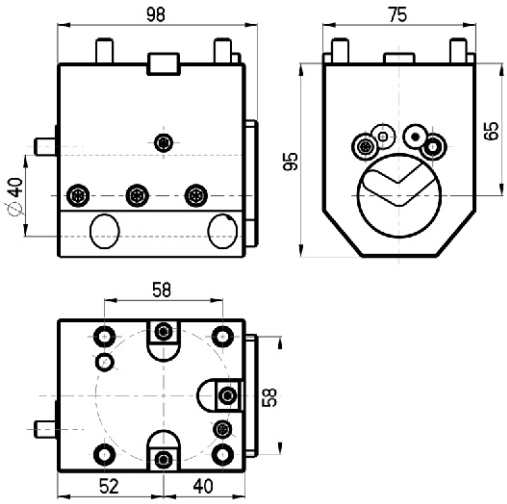

STATIC TOOLHOLDERS BMT45

Cut off toolholder

NGT CR-45x26(DO)
External cooling (RIGHT)

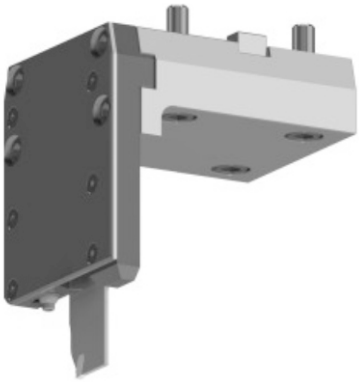

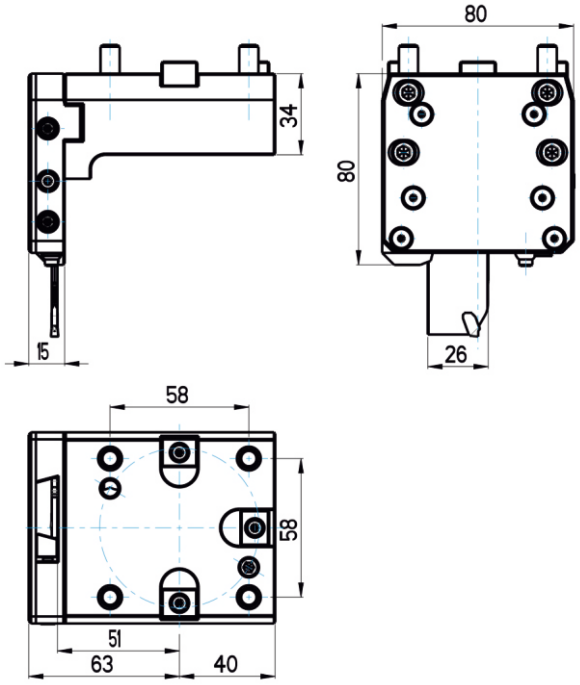

Cut off toolholder

NGT CL-45x26(DO)
External cooling (LEFT)

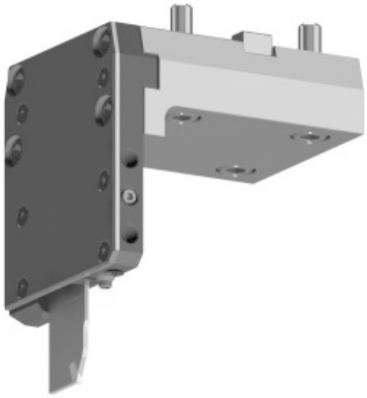

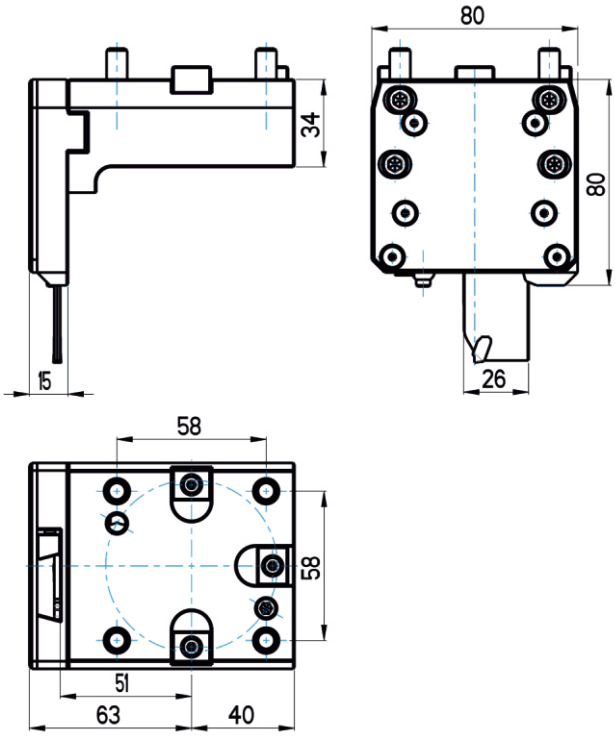

LIVE AND STATIC TOOLHOLDERS BMT55

Doosan	Lynx 300 (M)
	PUMA 1500/2000/2500 (M,S,Y)
	PUMA 2100 (Y,LY,SY,LSY)
	PUMA 2100/2600/3100 M/Y/MS/SY
	PUMA 230/240/280 (M,LM,S)
	PUMA GT2100M
	PUMA H250TM
	PUMA MX2100 (ST/LST)
	PUMA TL2000/2500 (M,LM)
Hardinge	BMT55
Hwacheon	Cutex-160
SMEC/Samsung	SL 20MC
Hyundai Wia	SKT-180TTSY
Victor	Vturn-A16/A20 (YSCM)

CONNECTION TURRET - BMT55

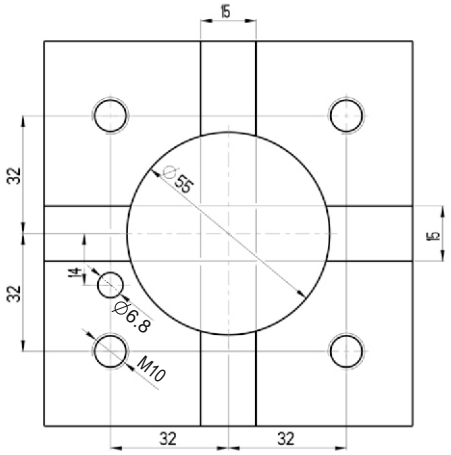

LIVE TOOLHOLDERS BMT55

Straight BMT drilling and milling head

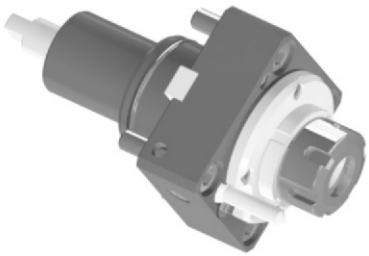

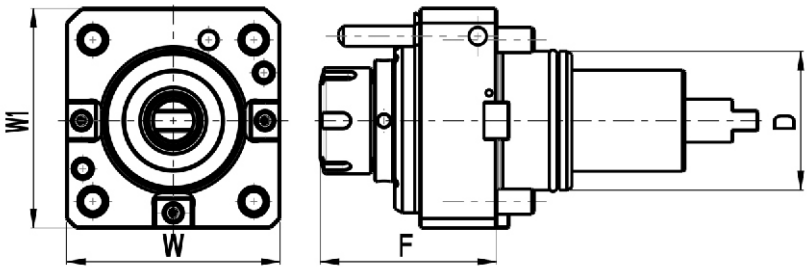

Code	D	Tool grip	Internal Cooling	F	W	W1	Torque [Nm]	Speed [rpm]	Ratio	P [bar]
NGT2-55/101-25/1(DO)	55	ER25	no	71	85	85	50	6000	1:1	-
NGT2-55/101-25/2(DO)	55	ER25	yes	71	85	85	50	6000	1:1	20

Angular BMT drilling and milling head

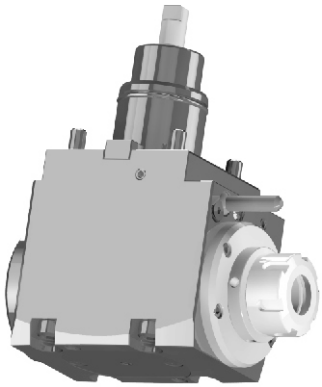

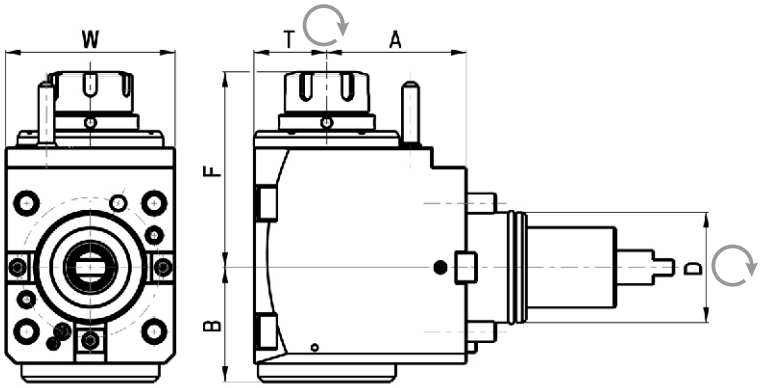

Code	D	Tool grip	Internal Cooling	Direction	A	B	F	T	W	Torque [Nm]	Speed [rpm]	Ratio	P [bar]
NGT2-55/201-25/1.3-70(DO)	55	ER25	no	right/left	70	57,5	86	37,5	85	50	6000	1:1	-
NGT2-55/201-25/2.3-70(DO)	55	ER25	yes	right/left	70	57,5	86	37,5	85	50	6000	1:1	20
NGT2-55/201-25/1.3-85(DO)	55	ER25	no	right/left	85	57,5	86	37,5	85	50	6000	1:1	-
NGT2-55/201-25/2.3-85(DO)	55	ER25	yes	right/left	85	57,5	86	37,5	85	50	6000	1:1	20
NGT2-55/201-32/1.3-85(DO)	55	ER32	no	right/left	85	57,5	86	37,5	85	50	6000	1:1	-
NGT2-55/201-32/2.3-85(DO)	55	ER32	yes	right/left	85	57,5	86	37,5	85	50	6000	1:1	20

* The straight, angular and variable toolholders can be equipped with Weldon shaft or shell-mill shaft upon request.

LIVE TOOLHOLDERS BMT55

Variable angle BMT drilling and milling head

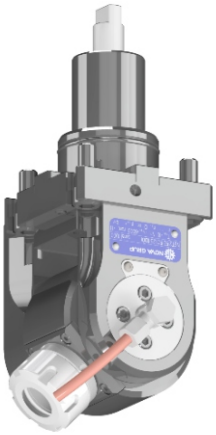

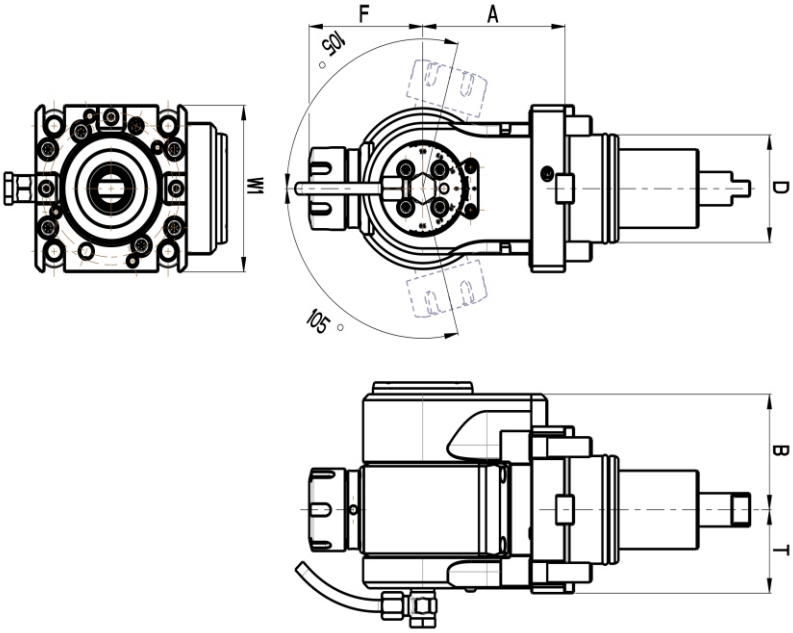

Code	D	Tool grip	Internal Cooling	Direction	A	B	F	T	W1	Torque [Nm]	Speed [rpm]	Ratio	P [bar]
NGT2-55/501-25/1(DO)	55	ER25	no	right/left	80	59	64	42,5	85	16	6000	1:1	-
NGT2-55/501-25/2(DO)	55	ER25	yes	right/left	80	59	64	42,5	85	16	6000	1:1	20

STATIC TOOLHOLDERS BMT55

Universal turning holder

NGT OD-55x25x75(DO)
External cooling

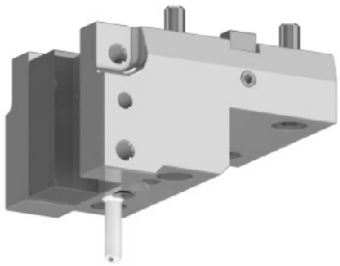

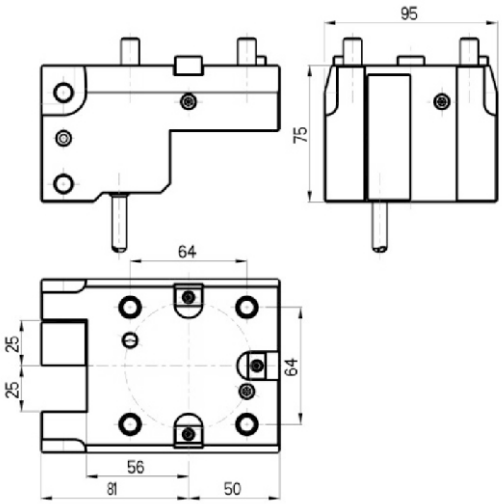

Universal turning face holder

NGT F-55x25x95(DO)
External cooling

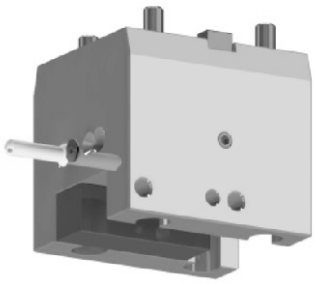

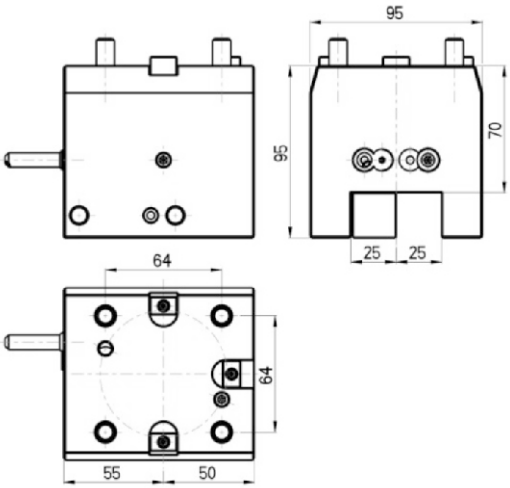

Boring bar holder

NGT ID-55x40x60(DO)
NGT ID-55x40x85(DO)
NGT ID-55x40x100(DO)
External/Internal cooling

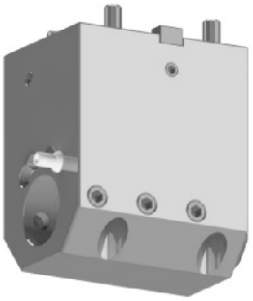

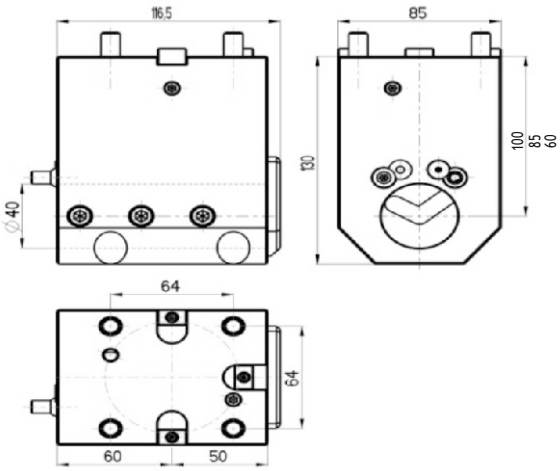

STATIC TOOLHOLDERS BMT55

Cut off toolholder

NGT CR-55x32(DO)
External cooling (RIGHT)

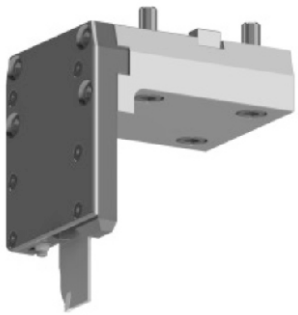

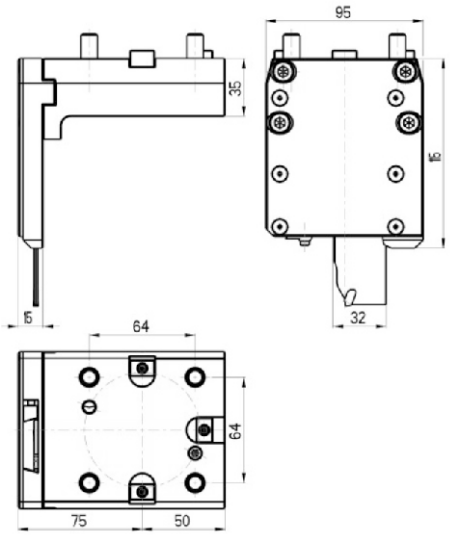

Cut off toolholder

NGT CL-55x32(DO)
External cooling (LEFT)

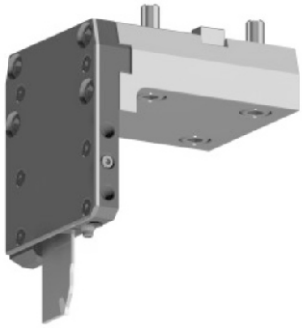

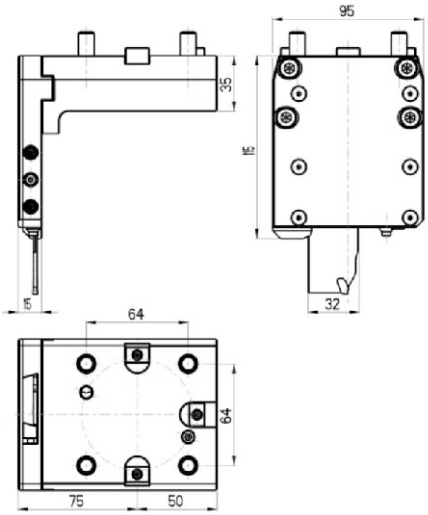

LIVE AND STATIC TOOLHOLDERS BMT65

Doosan	PUMA 2100/2600 (M,LM,MS,LMS)
	PUMA 2100/2600 (Y,LY,SY,LSY)
	PUMA 300 (M,MS,MB,MC)
	PUMA 3100 (M,LM,LY,XLM,XLY,ULM,ULY)
	PUMA MX2000/2500
	PUMA MX2600 (T,ST), PUMA TT2500 (MS/SY)
	PUMA V400 (M)
	PUMA VT450 (M,2SP)
Haas	ST 20Y, ST 35Y, DS-30Y
Hwacheon	Cutex-240/HI-TECH200/T2-Series
	HI-TECH300/400
	VT-450
Hyundai WIA	L2100SY
	SKT-200/250TTSY
	SKT-250/300 (L,M)
	SKT-250/300 (MS)
Maxsin	BMT65
SMEC/Samsung	SL 25/SL 35
Tongtai	TMT2000
Victor	Vturn-A26 (YSCM)

CONNECTION TURRET - BMT65

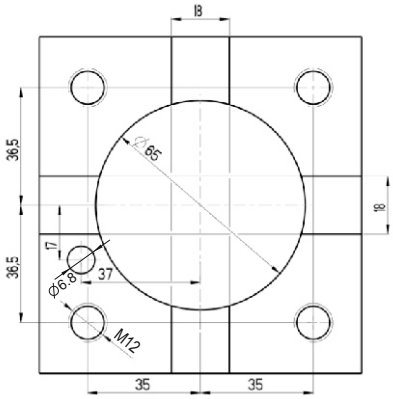

LIVE TOOLHOLDERS BMT65

Straight BMT drilling and milling head

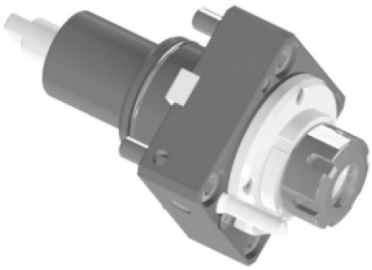

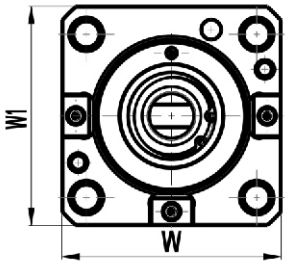

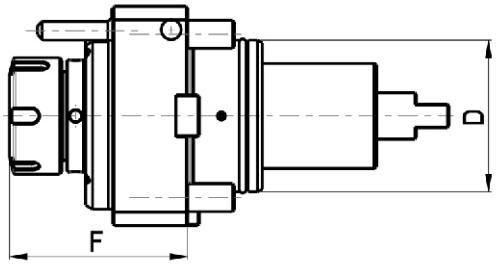

Code	D	Tool grip	Internal Cooling	F	W	W 1	Torque [Nm]	Speed [rpm]	Ratio	P [bar]
NGT2-65/101-32/1(DO)	65	ER32	no	75.3	94	94	70	6000	1:1	-
NGT2-65/101-32/2(DO)	65	ER32	yes	75.3	94	94	70	6000	1:1	20

Angular BMT drilling and milling head

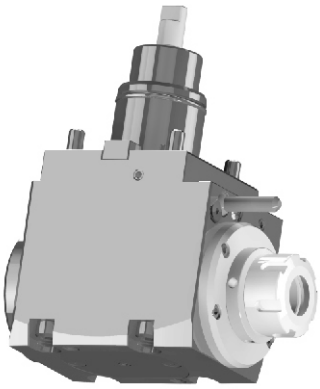

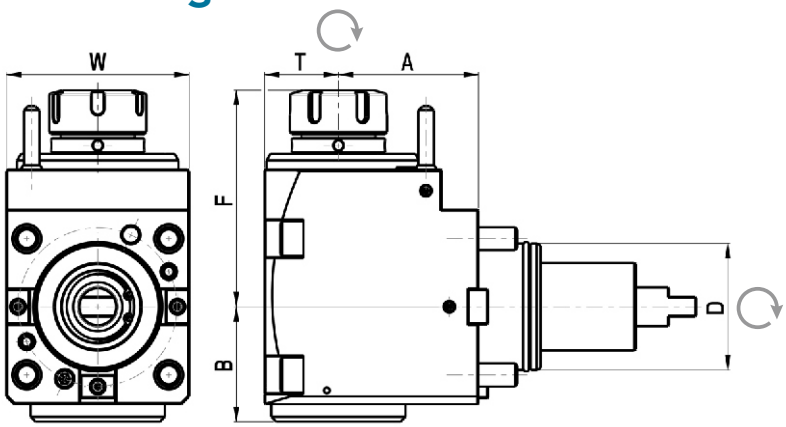

Code	D	Tool grip	Internal Cooling	Direction	A	B	F	T	W	Torque [Nm]	Speed [rpm]	Ratio	P [bar]
NGT2-65/201-32/1.3-72(DO)	65	ER32	no	right/left	72	59	110	38	94	70	6000	1:1	-
NGT2-65/201-32/2.3-72(DO)	65	ER32	yes	right/left	72	59	110	38	94	70	6000	1:1	20
NGT2-65/201-32/1.3-100(DO)	65	ER32	no	right/left	100	59	110	38	94	70	6000	1:1	-
NGT2-65/201-32/2.3-100(DO)	65	ER32	yes	right/left	100	59	110	38	94	70	6000	1:1	20

LIVE TOOLHOLDERS BMT65

Variable angle BMT drilling and milling head

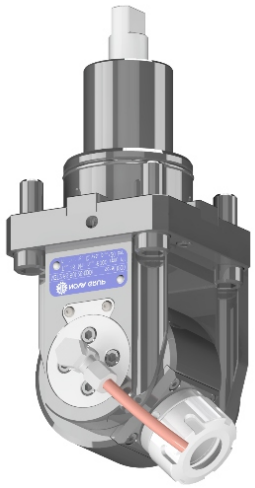

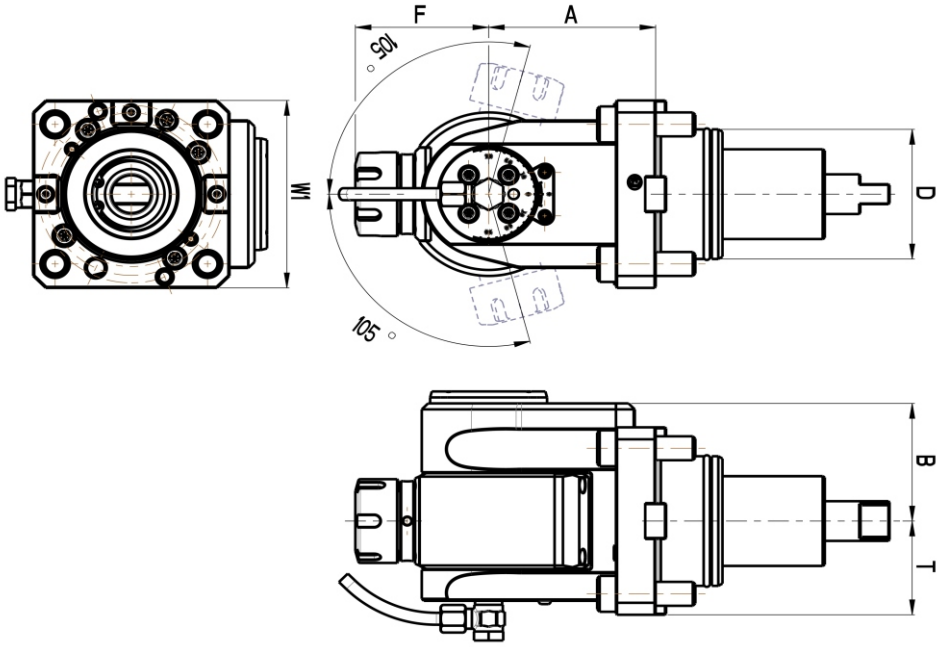

Code	D	Tool grip	Internal Cooling	Direction	A	B	F	T	W1	Torque [Nm]	Speed [rpm]	Ratio	P [bar]
NGT2-65/501-25/1(DO)	65	ER25	no	right/left	80	59	64	47	94	16	6000	1:1	-
NGT2-65/501-25/2(DO)	65	ER25	yes	right/left	80	59	64	47	94	16	6000	1:1	20

STATIC TOOLHOLDERS BMT65

Universal turning holder

NGT OD-65x25x75(DO)
External cooling

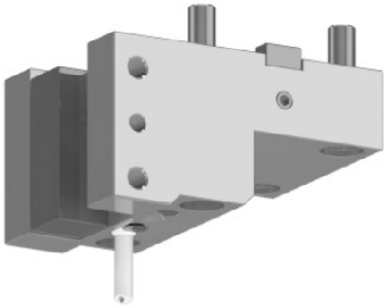

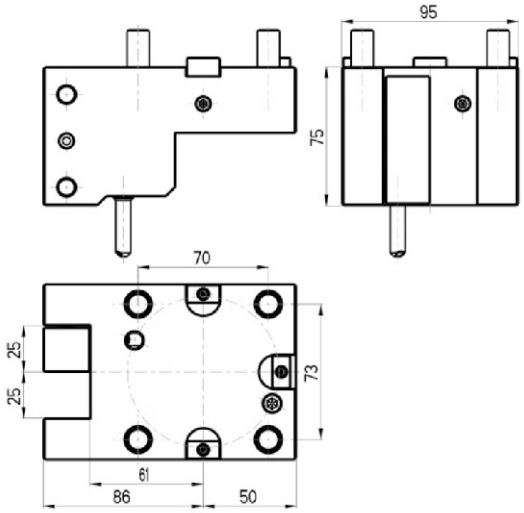

Universal turning face holder

NGT F-65x25x95(DO)
External cooling

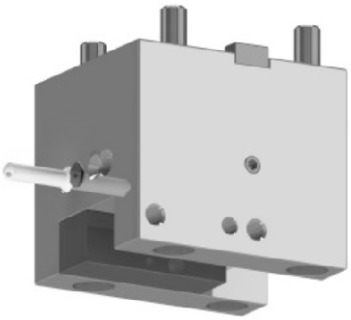

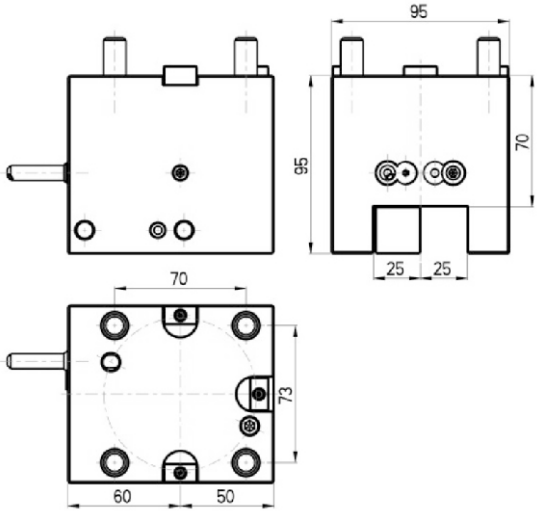

Boring bar holder

NGT ID-65x40x100(DO)
NGT ID-65x40x72(DO)
NGT ID-65x32x72(DO)
External/Internal cooling

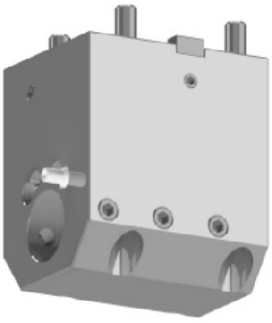

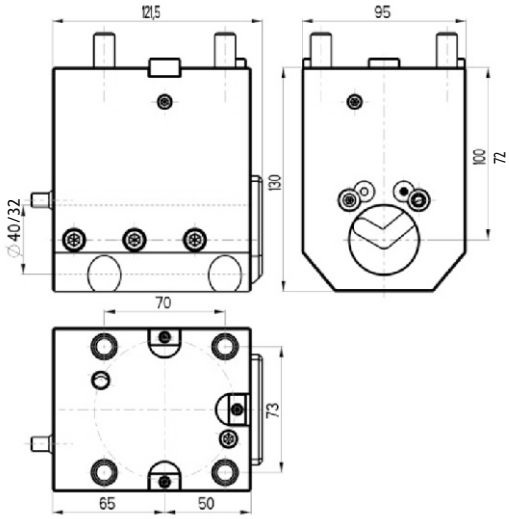

STATIC TOOLHOLDERS BMT65

Cut off toolholder

NGT CR-65x32(DO)
External cooling (RIGHT)

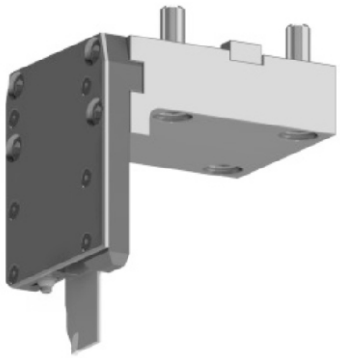

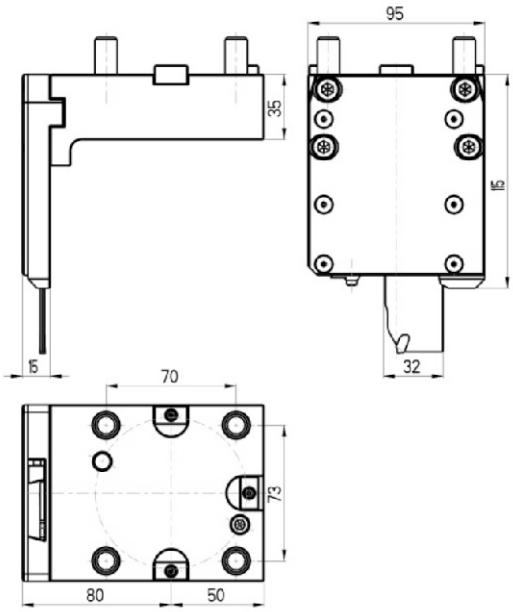

Cut off toolholder

NGT CL-65x32(DO)
External cooling (LEFT)

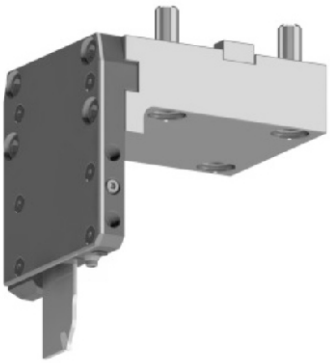

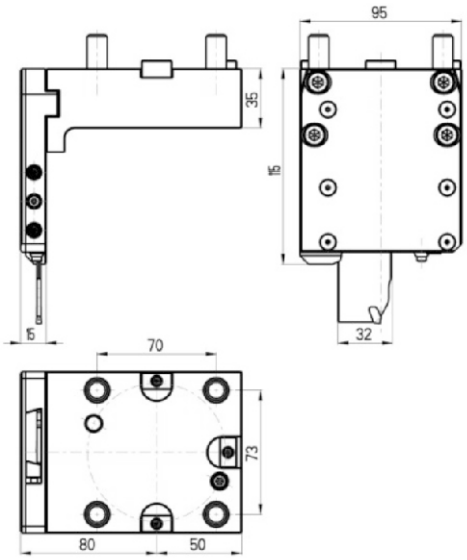

HAAS BOT TURRET

Haas	ST-20SS/SSY-Hybrid VB24
	ST-30SS/SSY-Hybrid VB24
	DS-30SS/SSY-Hybrid VB24

Universal turning holder

NGT OD-20x53(HA)
External cooling

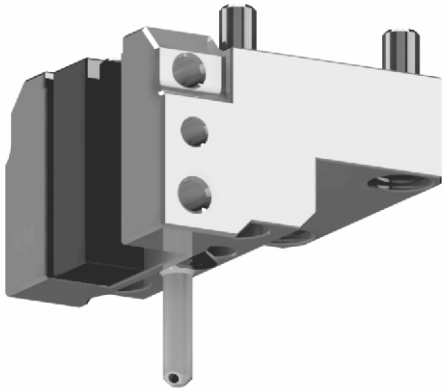

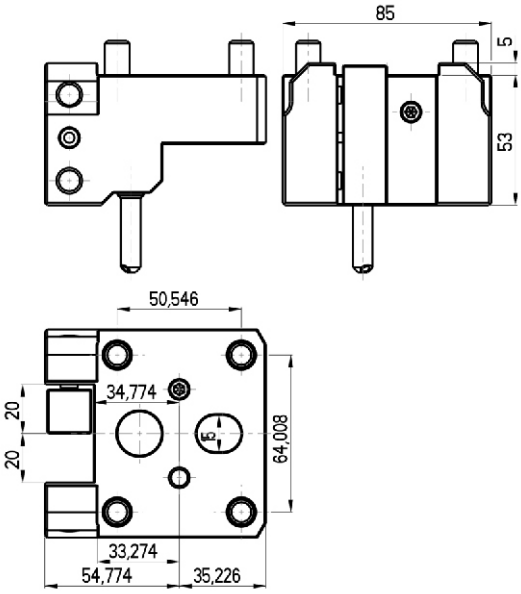

Universal turning holder

NGT OD-20x110(HA)
External cooling

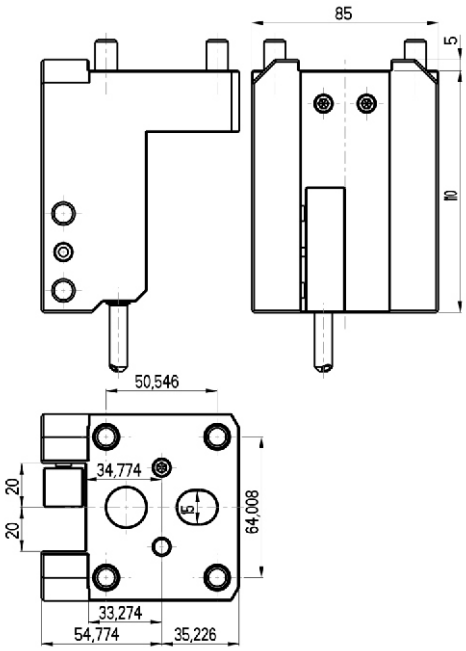

HAAS BOT TURRET

Universal turning face holder

NGT F-20x38(HA)
External cooling

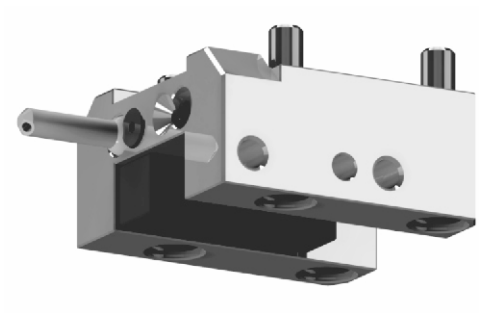

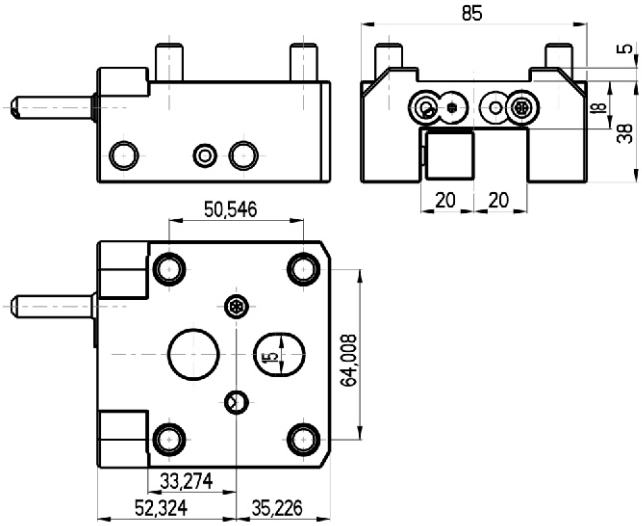

Universal turning double holder

NGT OD-20x85D(HA)
External cooling

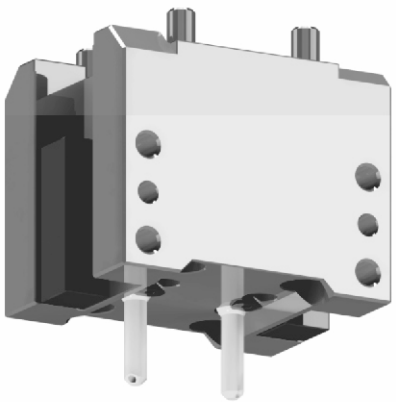

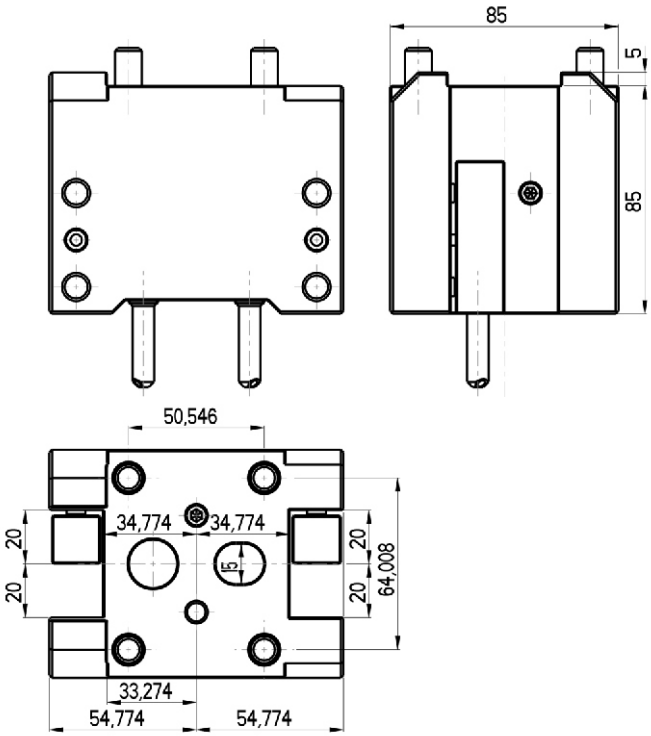

HAAS BOT TURRET

Boring bar holder

NGT ID-32x25.4(HA)
External/internal cooling

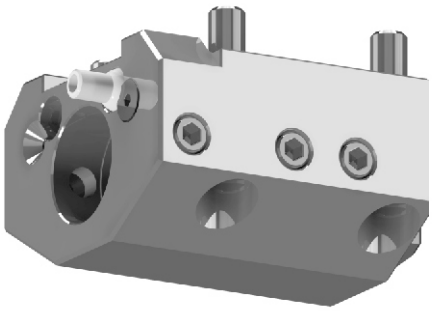

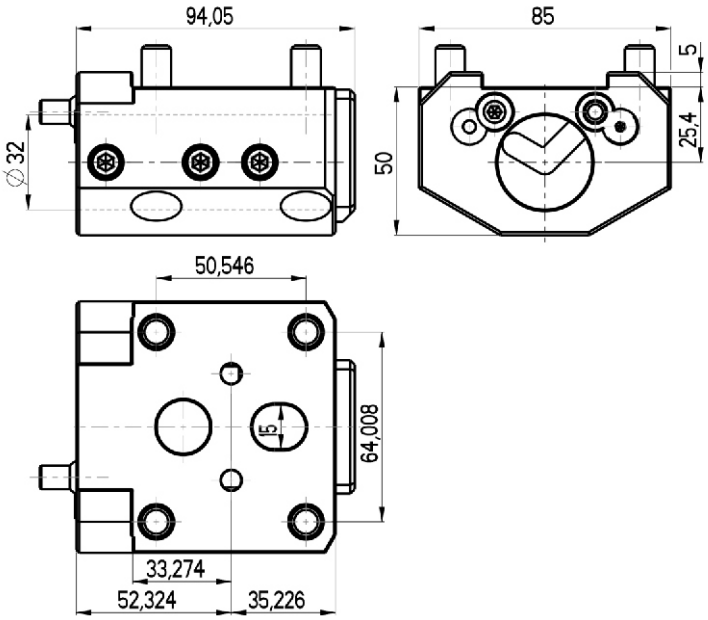

Boring bar holder

NGT ID-25x25.4(HA)
External/internal cooling

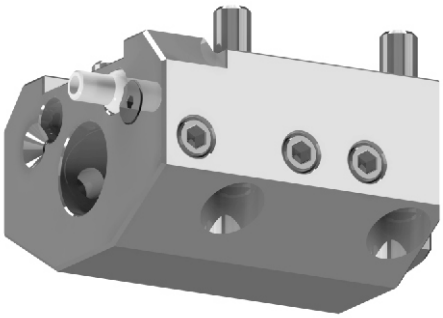

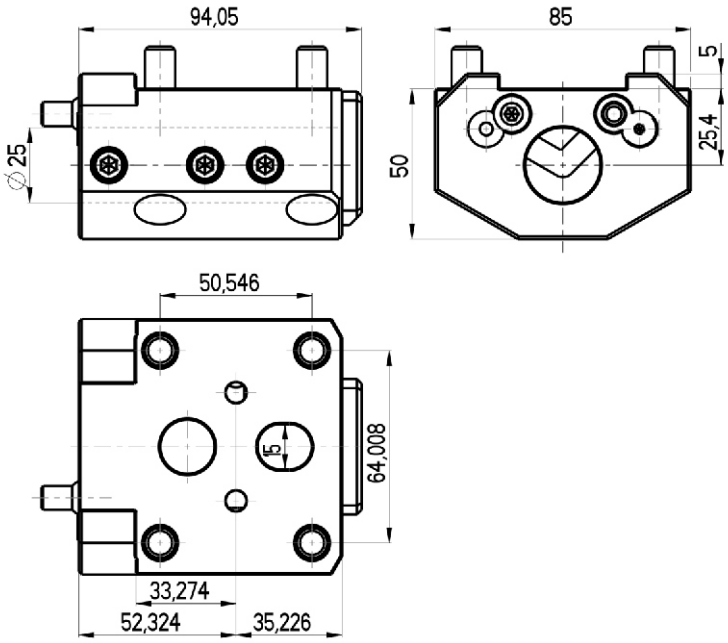

HAAS BOT TURRET

Boring bar holder

NGT ID-20x31.75/86.36D(HA)
External/internal cooling

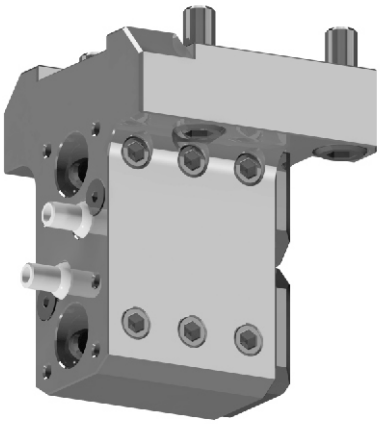

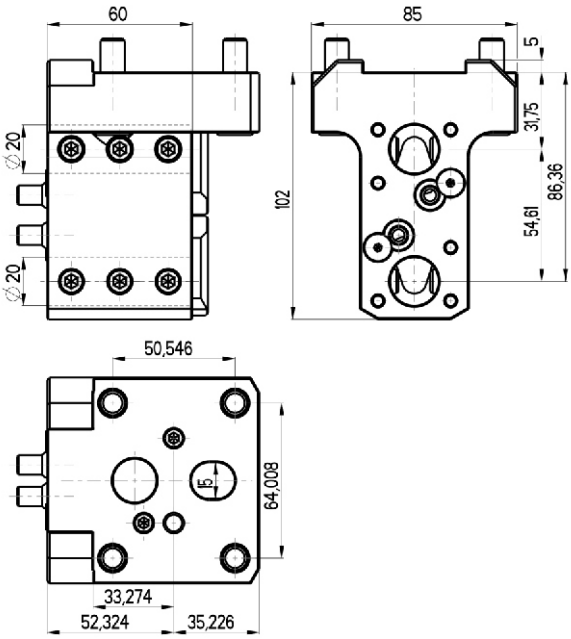

Boring bar holder

NGT ID-20x60.325/114.935D(HA)
External/internal cooling

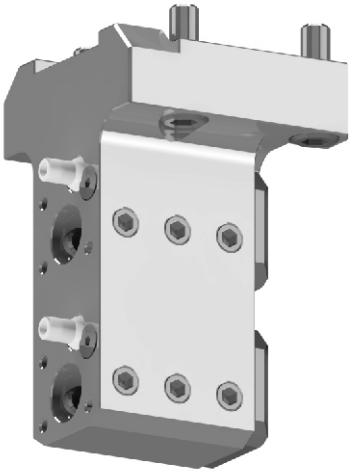

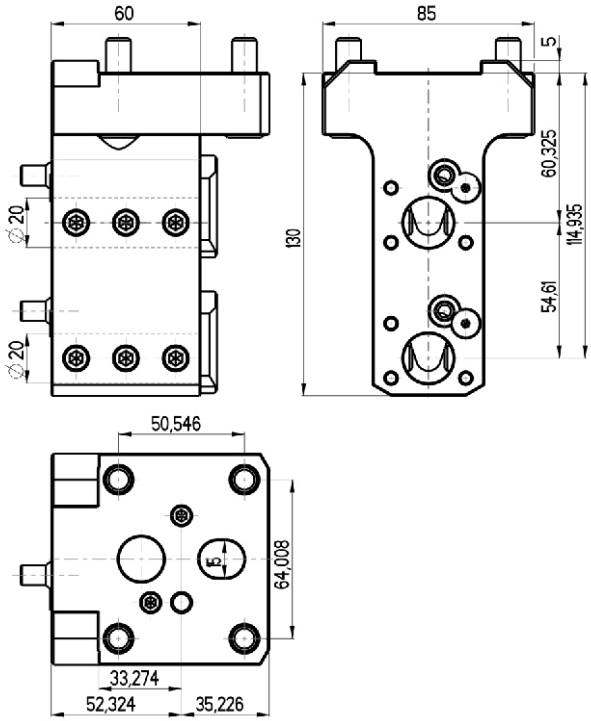

HAAS BOT TURRET

Haas	DS-30Y-Hybrid VB12
	SL-20Y-Hybrid VB12
	SL-30Y-Hybrid VB12
	ST-20Y-Hybrid VB12
	ST-30Y-Hybrid VB12

Boring bar holder

NGT ID-40x31.75(HA)
External/Internal cooling

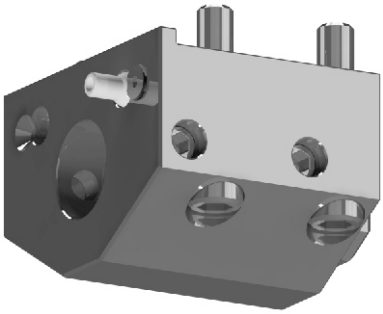

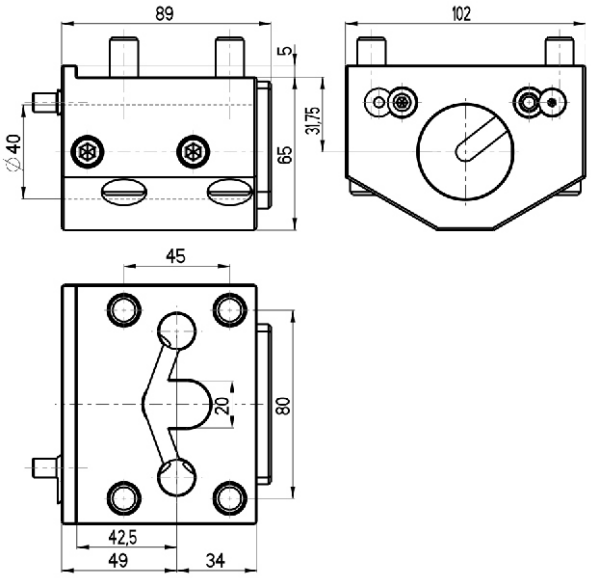

Boring bar holder

NGT ID-32x31.75 (HA)
External/Internal cooling

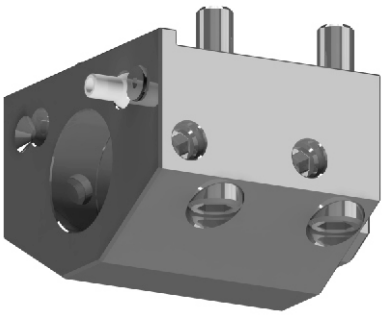

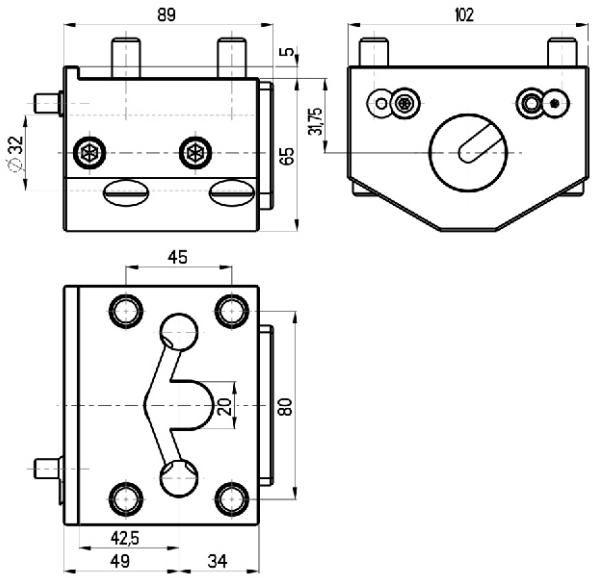

NAKAMURA-TOME LIVE AND STATIC TOOLHOLDERS BMT44

Nakamura-Tome	NTJ 200
	Super NTMX
	Super NTY3
	WT-100
	WY-100
Murata	Muratec MT100

CONNECTION TURRET - NAKAMURA-TOME BMT44

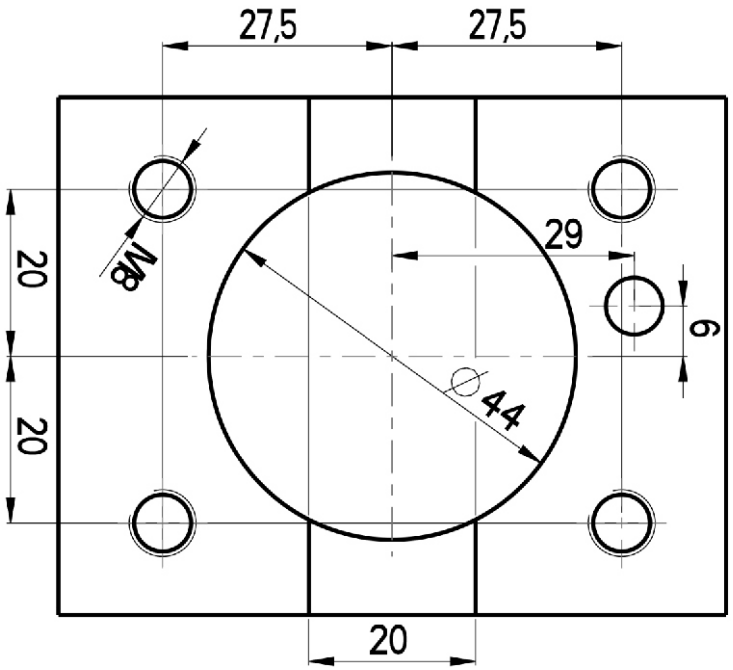

NAKAMURA-TOME LIVE TOOLHOLDERS BMT44

Straight BMT drilling and milling head

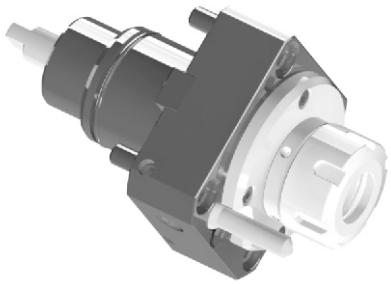

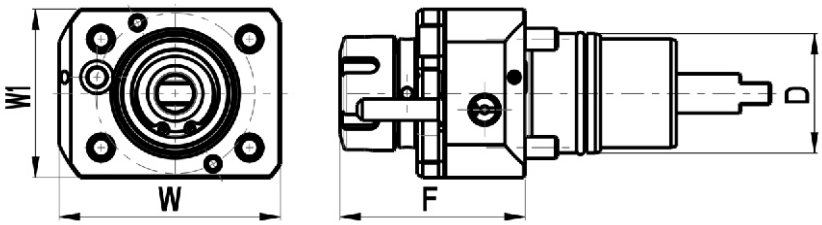

Code	D	Tool grip	Internal Cooling	F	W	W1	Torque [Nm]	Speed [rpm]	Ratio	P [bar]
NGT2-44/101-25/1(NT)	44	ER25	no	69	82	62	40	6000	1:1	-
NGT2-44/101-25/2(NT)	44	ER25	yes	69	82	62	40	6000	1:1	20

Angular BMT drilling and milling head

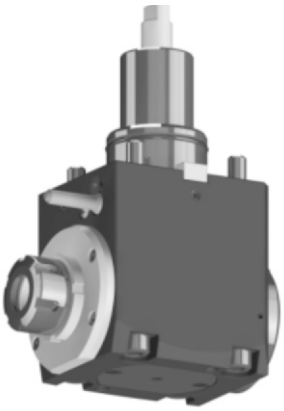

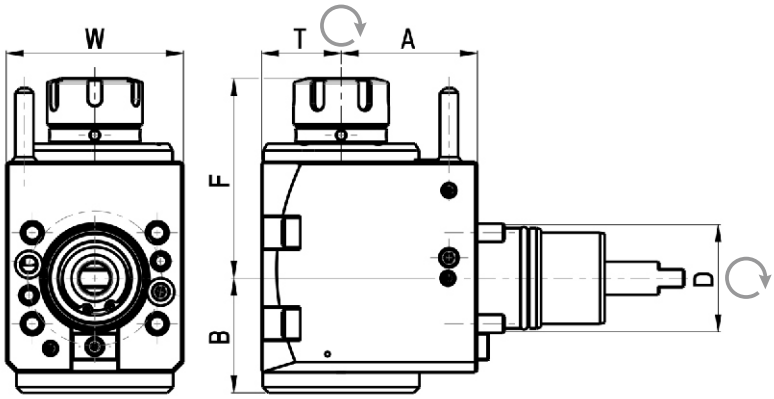

Code	D	Tool grip	Internal Cooling	Direction	A	B	F	T	W	Torque [Nm]	Speed [rpm]	Ratio	P [bar]
NGT2-44/201-25/1.3-60(NT)	44	ER25	no	right/left	60	50	88	35	78	28	6000	1:1	-
NGT2-44/201-25/2.3-60(NT)	44	ER25	yes	right/left	60	50	88	35	78	28	6000	1:1	20

* The straight, angular and variable toolholders can be equipped with Weldon shaft or shell-mill shaft upon request.

NAKAMURA-TOME STATIC TOOLHOLDERS BMT44

Universal turning holder

NGT OD-44x20x62(NT)
External cooling

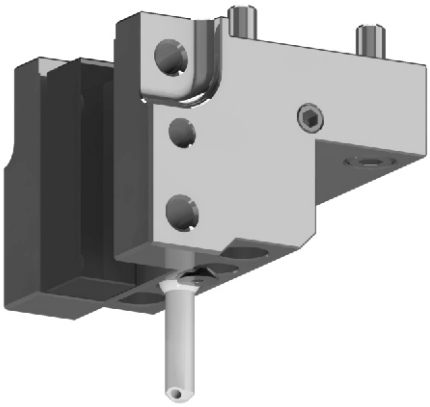

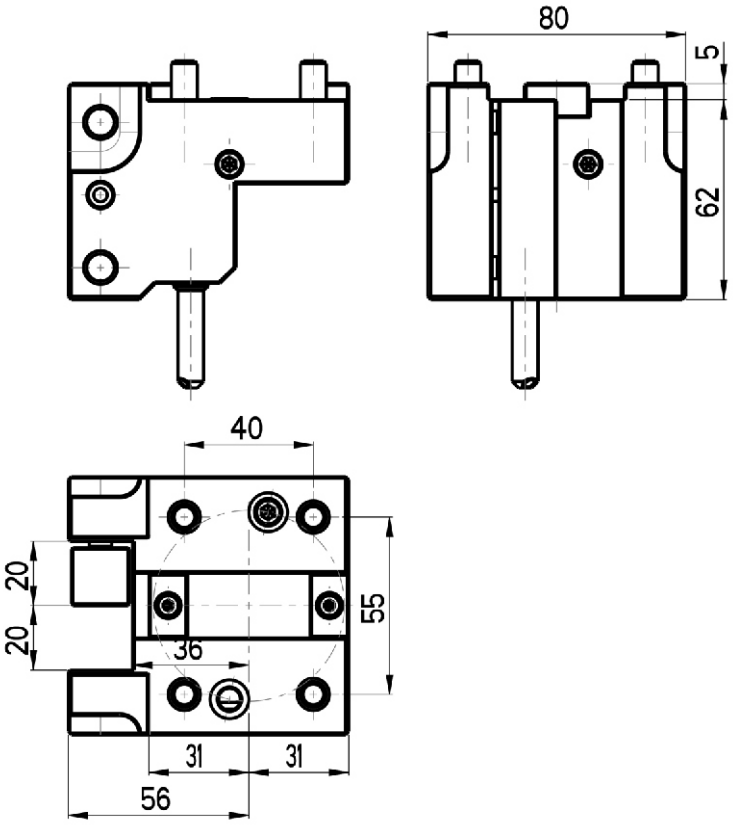

Universal turning face holder

NGT F-44x20x60(NT)
External cooling

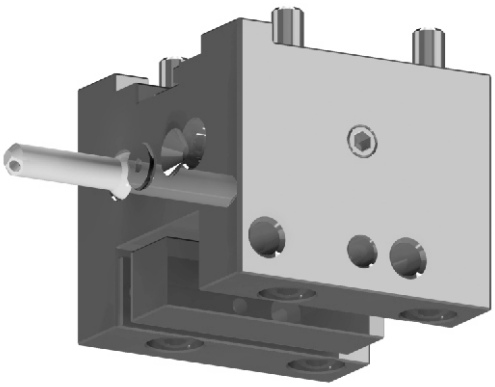

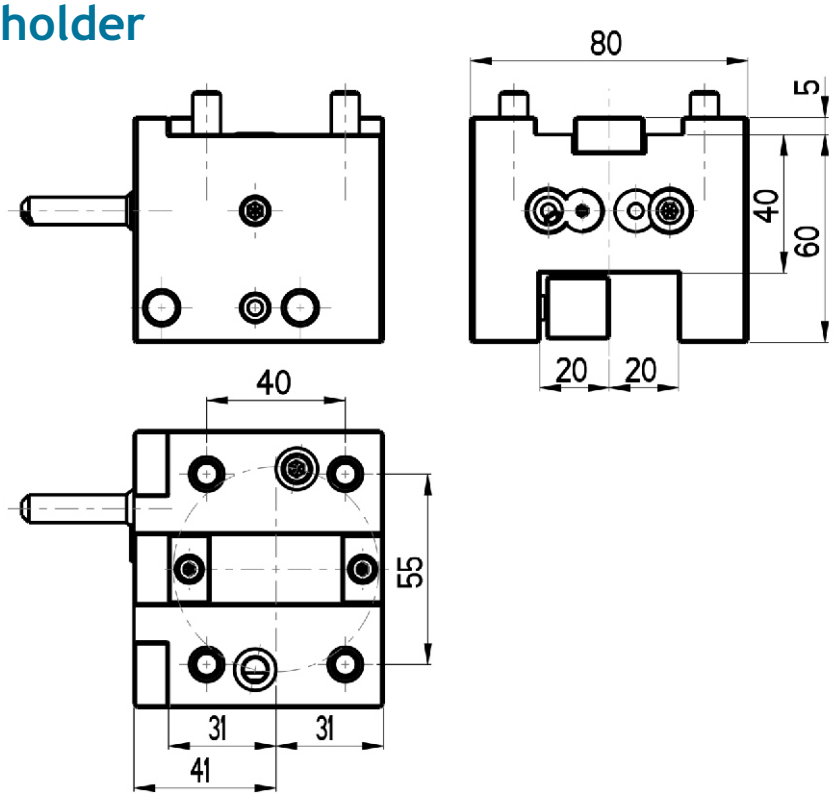

NAKAMURA-TOME STATIC TOOLHOLDERS BMT44

Boring bar holder

NGT ID-44x25x60(NT)
External/Internal cooling

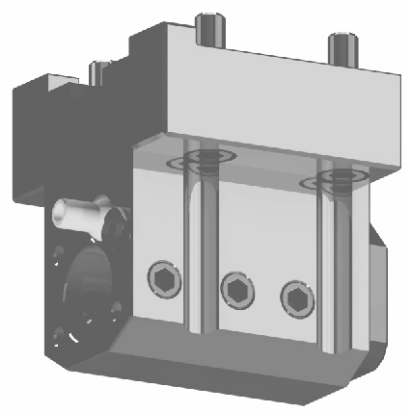

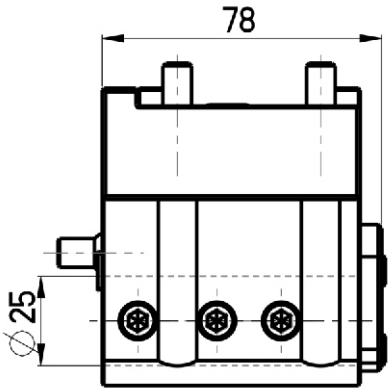

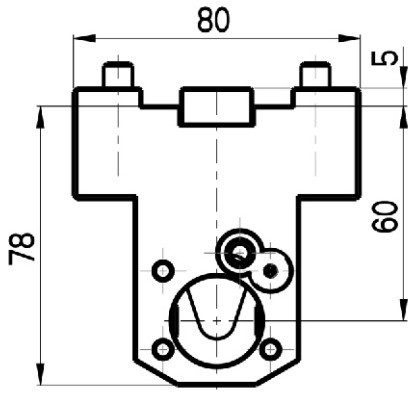

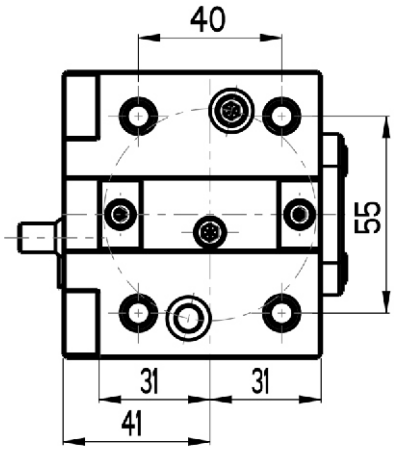

NAKAMURA-TOME STATIC TOOLHOLDERS BMT44

Cut off toolholder (right)

NGT CR-44x26(NT)
External cooling

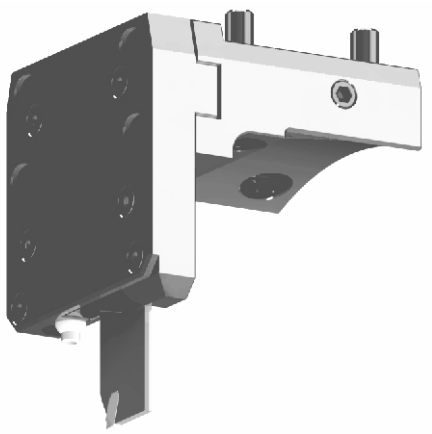

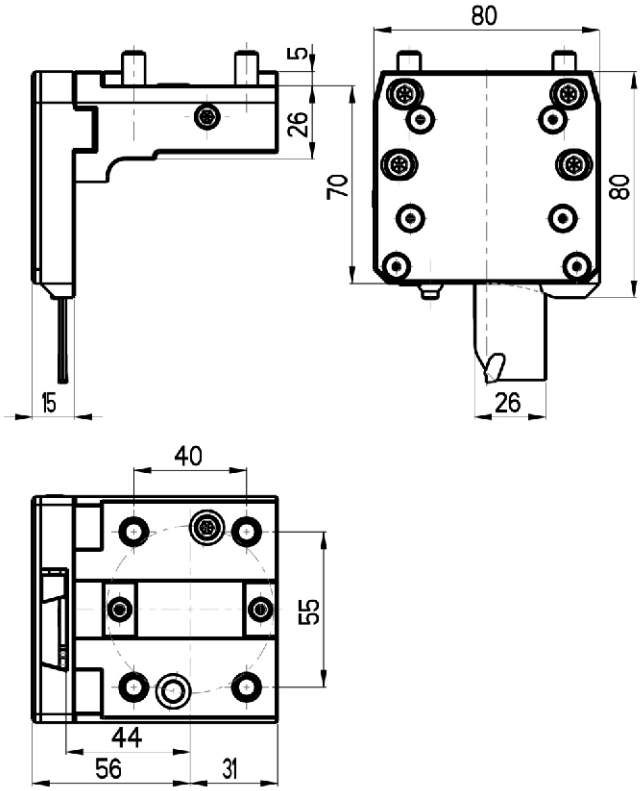

Cut off toolholder (left)

NGT CL-44x26(NT)
External cooling

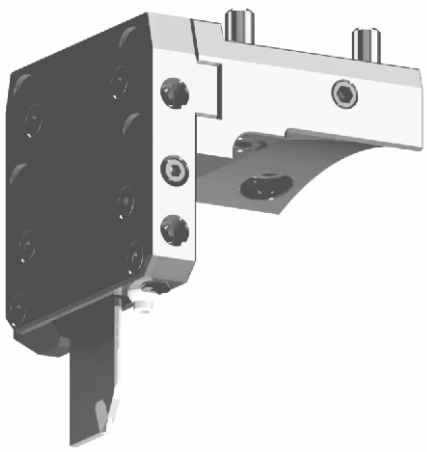

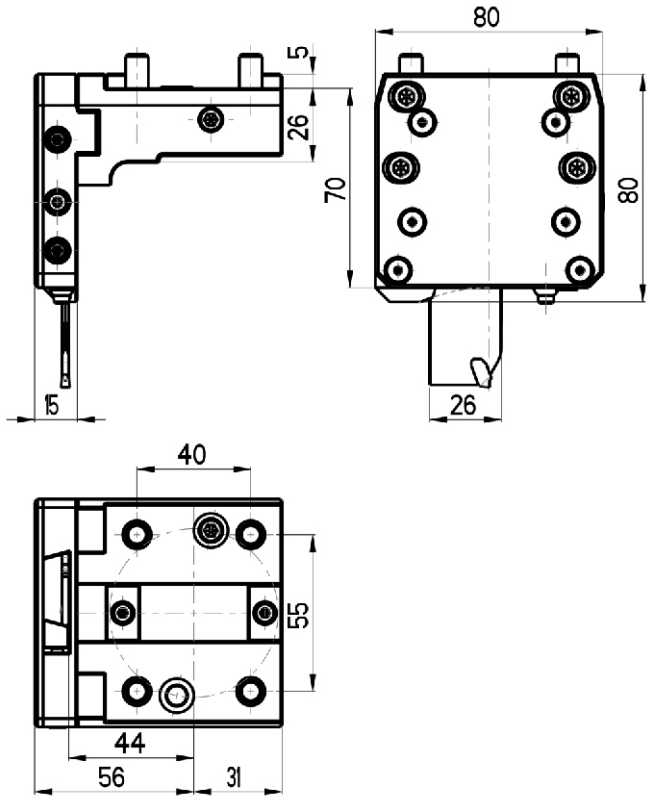

NAKAMURA-TOME LIVE AND STATIC TOOLHOLDERS BMT55

Nakamura-Tome	AS-200
	NTM 3
	NTY 3 -250
	SC-150 M
	SC-200 MY
	SC-250 M
	Super NTJ
	TMC- 20 II M/ML
	TW-10
	TW-20
	WT-20 II M/MY
	WT-150
	WT-250
	WTS -150
	WTW -150
	WY -250
CMZ	TX 52/66

CONNECTION TURRET - NAKAMURA-TOME BMT55

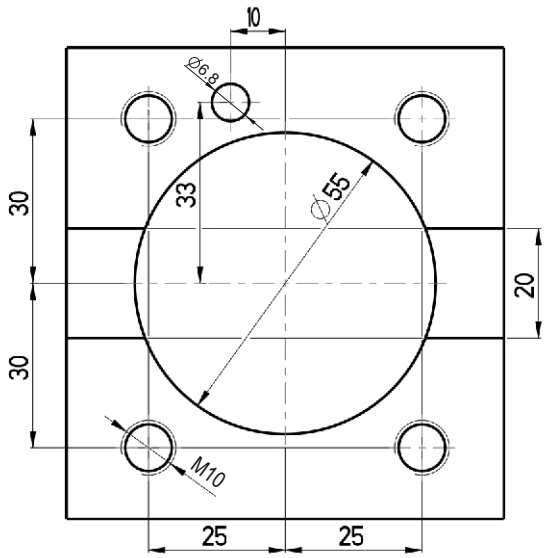

NAKAMURA-TOME LIVE TOOLHOLDERS BMT55

Straight BMT drilling and milling head

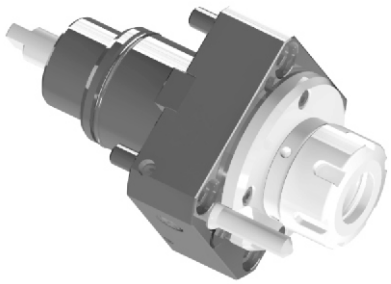

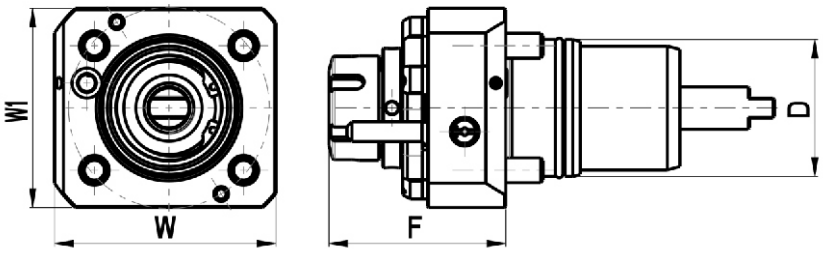

Code	D	Tool grip	Internal Cooling	F	W	W1	Torque [Nm]	Speed [rpm]	Ratio	P [bar]
NGT2-55/101-25/1(NT)	55	ER25	no	71	80	86	50	6000	1:1	-
NGT2-55/101-25/2(NT)	55	ER25	yes	71	80	86	50	6000	1:1	20

Angular BMT drilling and milling head

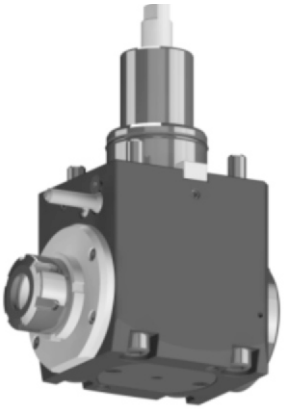

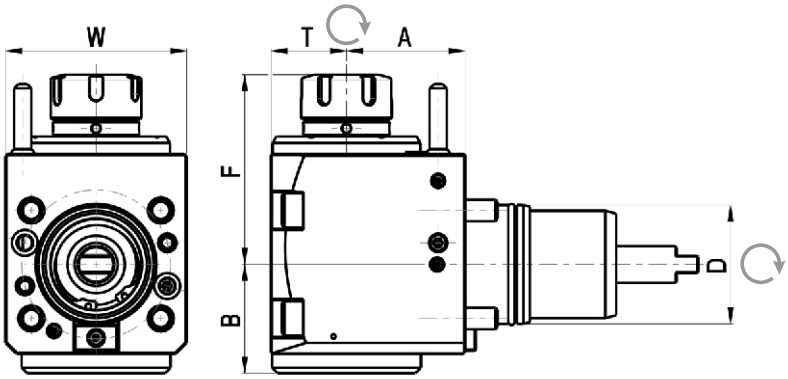

Code	D	Tool grip	Internal Cooling	Direction	A	B	F	T	W	Torque [Nm]	Speed [rpm]	Ratio	P [bar]
NGT2-55/201-25/1.3-55(NT)	55	ER25	no	right/left	55	50.3	74.8	35	84	28	6000	1:1	-
NGT2-55/201-25/2.3-55(NT)	55	ER25	yes	right/left	55	50.3	74.8	35	84	28	6000	1:1	20

NAKAMURA-TOME STATIC TOOLHOLDERS BMT55

Boring bar holder

NGT ID-55x32x55S(NT)
External/Internal cooling

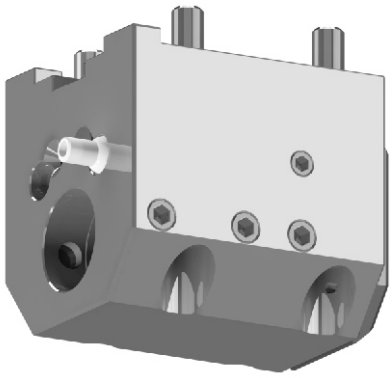

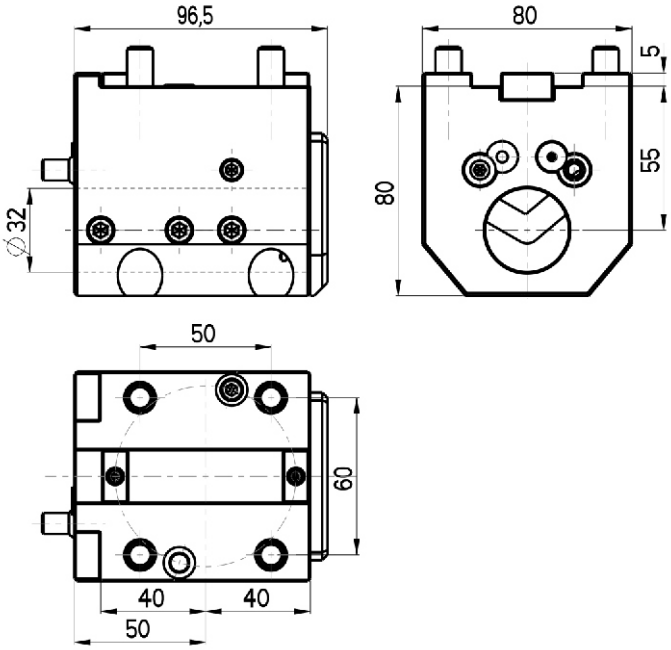

Extended boring bar holder

NGT ID -55x32x55(NT)
External cooling

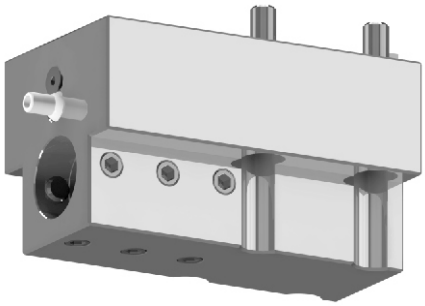

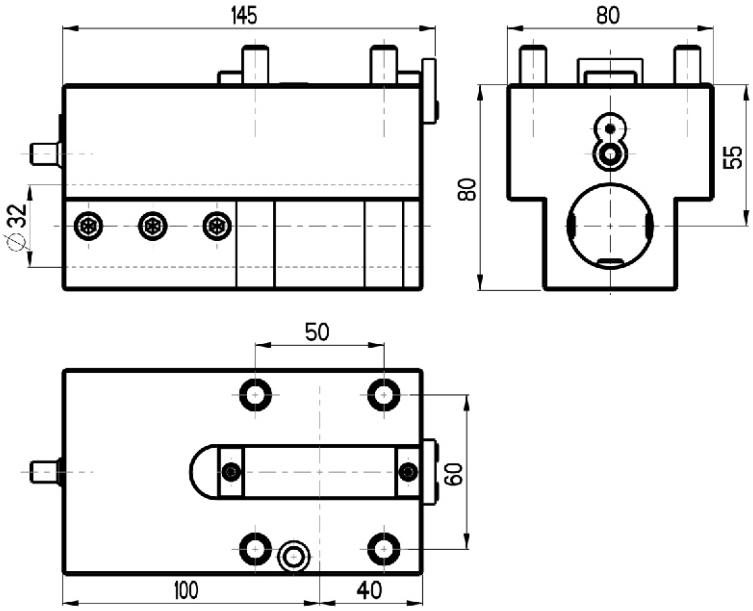

NAKAMURA-TOME STATIC TOOLHOLDERS BMT55

Universal turning holder

NGT OD-55x20x65(NT)
External cooling

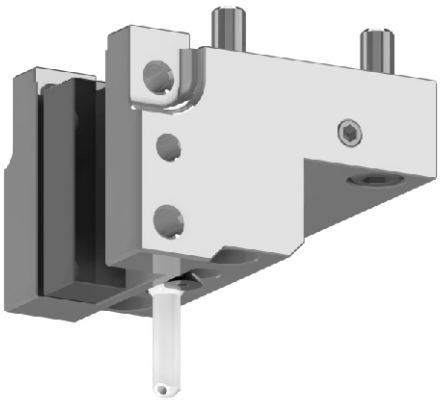

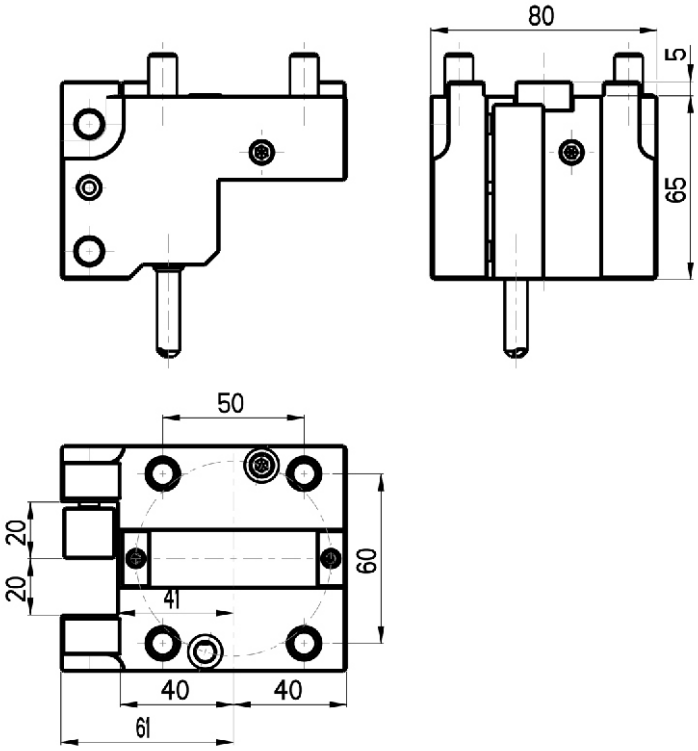

Universal turning face holder

NGT F-55x20x60(NT)
External cooling

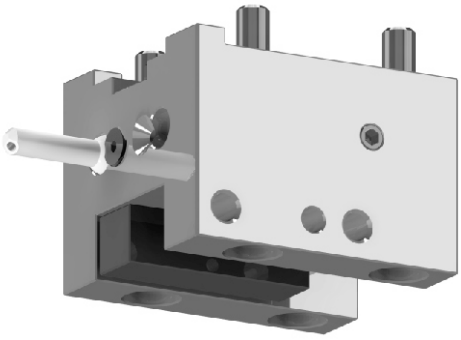

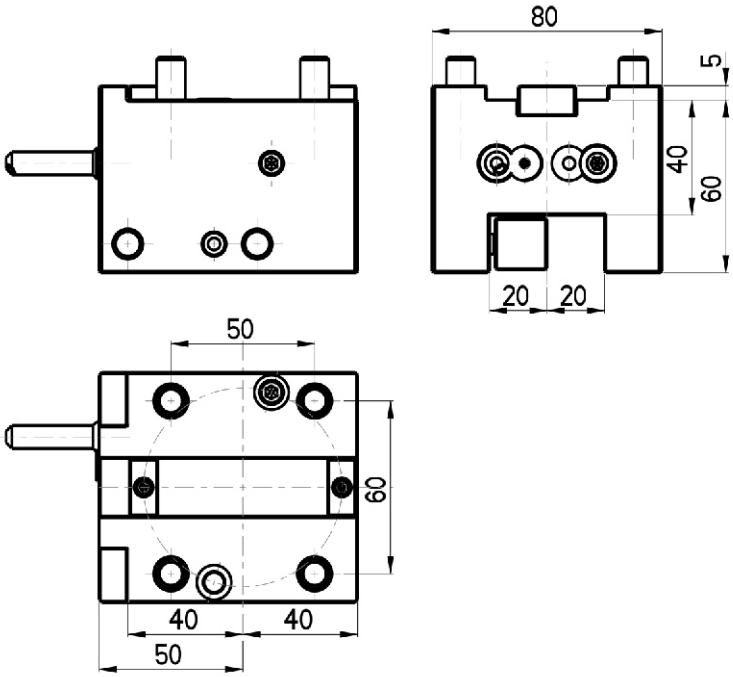

NAKAMURA-TOME STATIC TOOLHOLDERS BMT55

Cut off toolholder (right)

NGT CR-55x32(NT)
External cooling

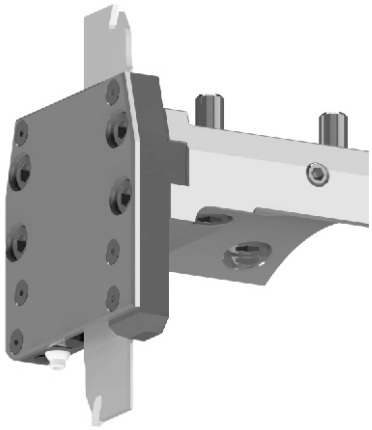

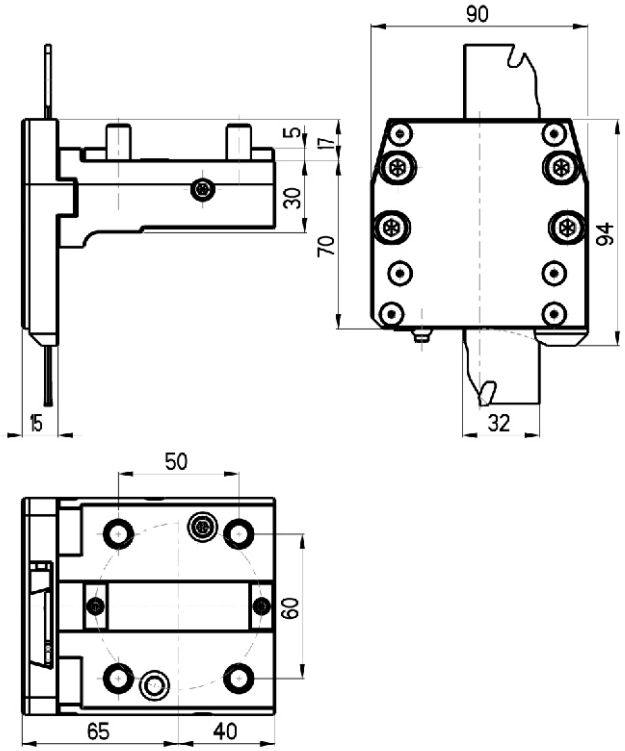

Cut off toolholder (left)

NGT CL-55x32(NT)
External cooling

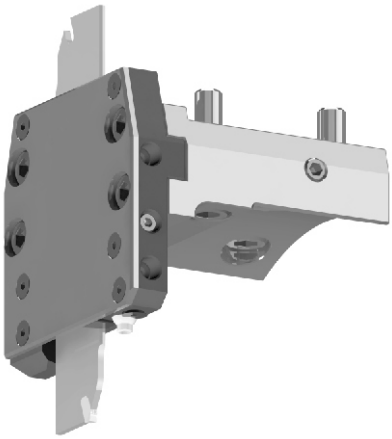

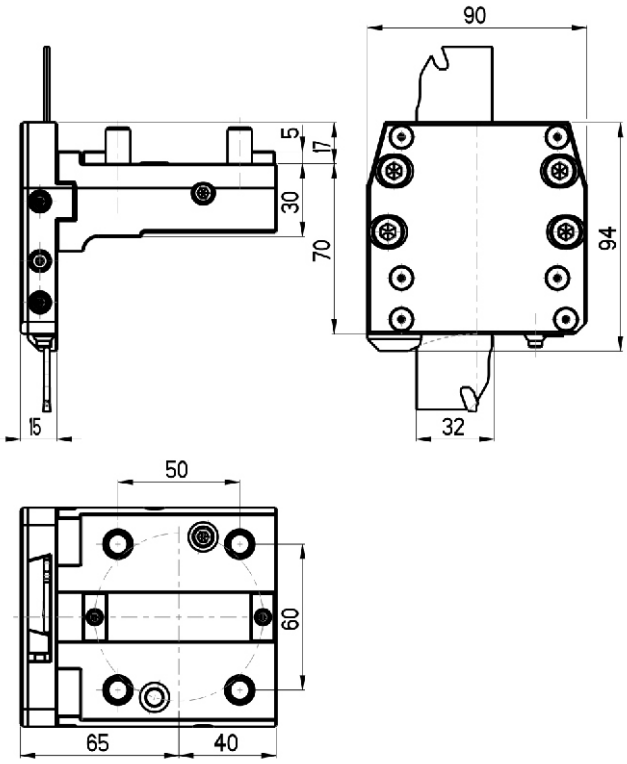

NAKAMURA-TOME LIVE AND STATIC TOOLHOLDERS BMT65

Nakamura-Tome	WT300
	SC300
	TW20
	TMC-200M, TMC-300M
	SUPER NTX
	TW20M, MY, MM, MMY, MMYY (12 stations)
	TW30M, MY, MM, MMY, MMYY (16 stations)

CONNECTION TURRET - NAKAMURA-TOME BMT65

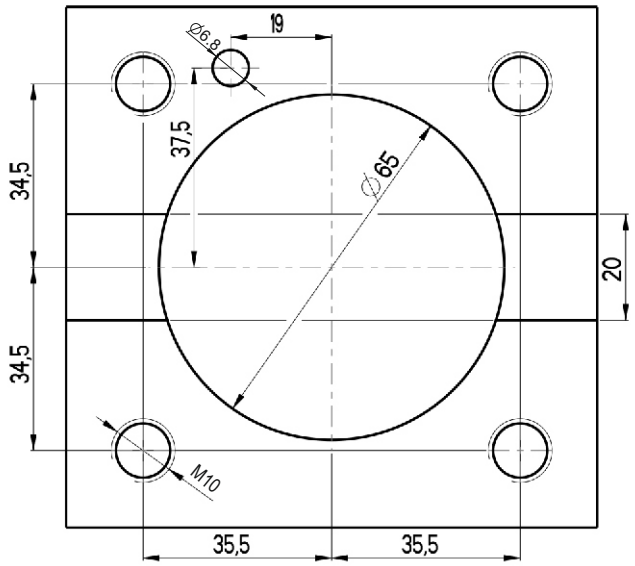

NAKAMURA-TOME LIVE TOOLHOLDERS BMT65

Straight BMT drilling and milling head

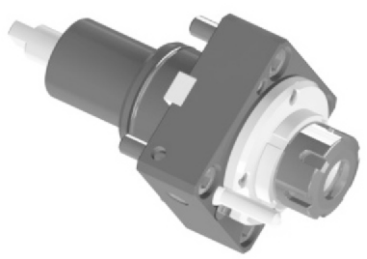

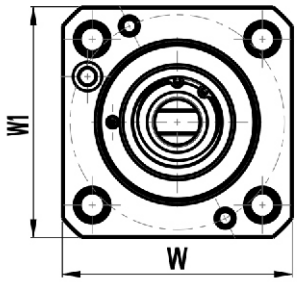

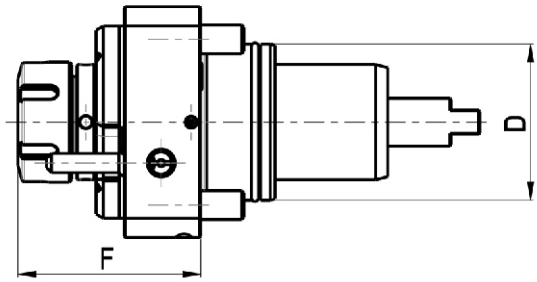

Code	D	Tool grip	Internal Cooling	F	W	W1	Torque [Nm]	Speed [rpm]	Ratio	P [bar]
NGT2-65/101-32/1(NT)	65	ER32	no	75	96	96	70	6000	1:1	-
NGT2-65/101-32/2(NT)	65	ER32	yes	75	96	96	70	6000	1:1	20

Angular BMT drilling and milling head

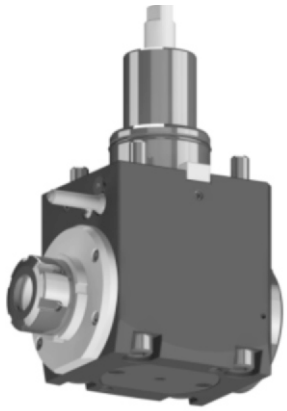

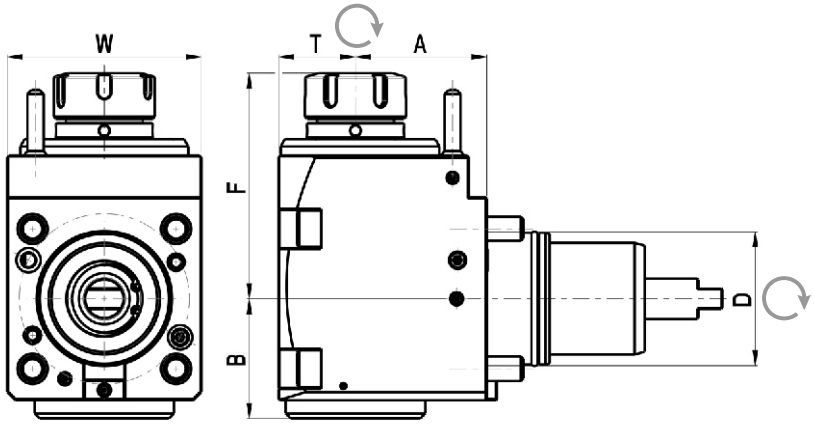

Code	D	Tool grip	Internal Cooling	Direction	A	B	F	T	W	Torque [Nm]	Speed [rpm]	Ratio	P [bar]
NGT2-65/201-32/1.3-65(NT)	65	ER32	no	right/left	65	59	110	38	96	70	6000	1:1	-
NGT2-65/201-32/2.3-65(NT)	65	ER32	yes	right/left	65	59	110	38	96	70	6000	1:1	20

* The straight, angular and variable toolholders can be equipped with Weldon shaft or shell-mill shaft upon request.

NAKAMURA-TOME STATIC TOOLHOLDERS BMT65

Universal turning holder

NGT OD -65x25x70(NT)
External cooling

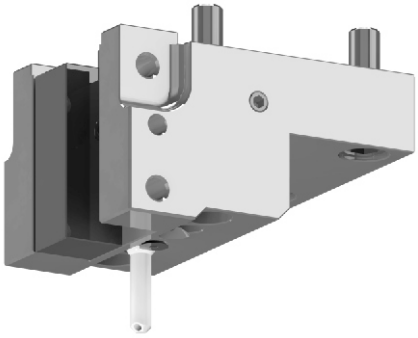

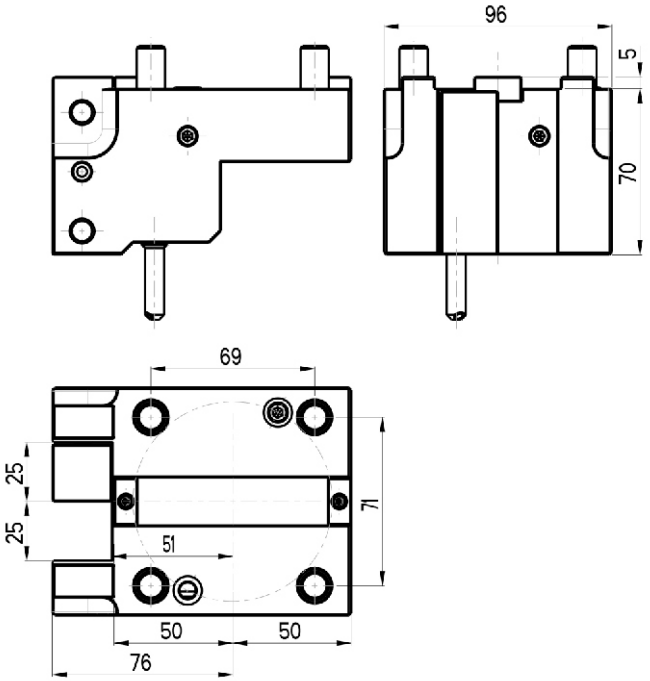

Universal turning face holder

NGT F -65x25x95(NT)
External cooling

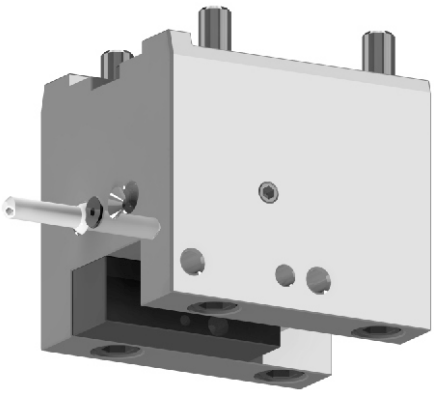

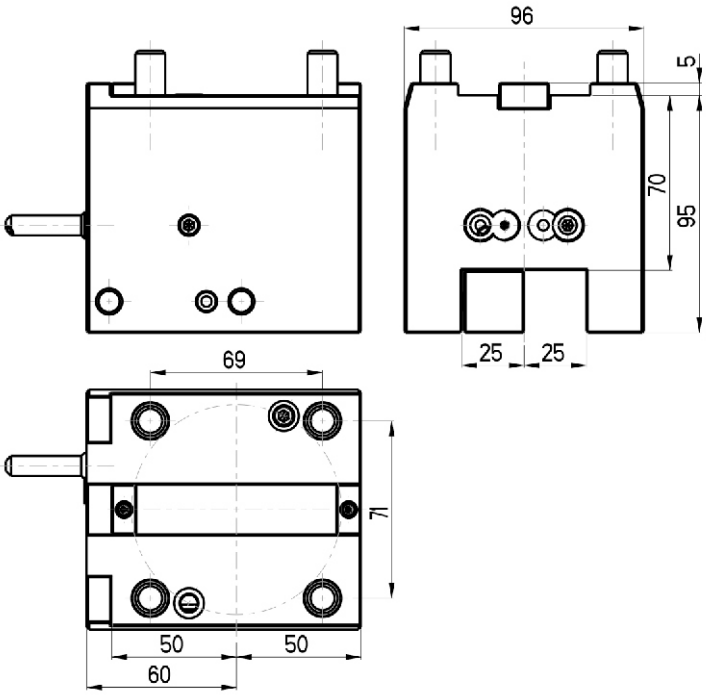

NAKAMURA-TOME STATIC TOOLHOLDERS BMT65

Boring bar holder

NGT ID-65x40x90(NT)
External/Internal cooling

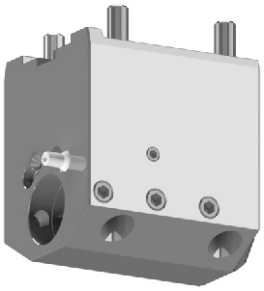

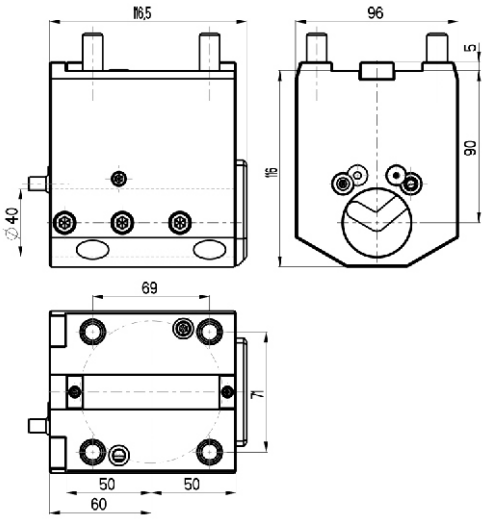

Cut off toolholder (right)

NGT CR-65x32(NT)
External cooling

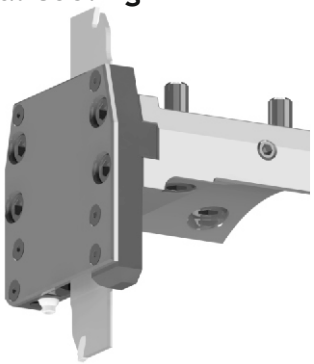

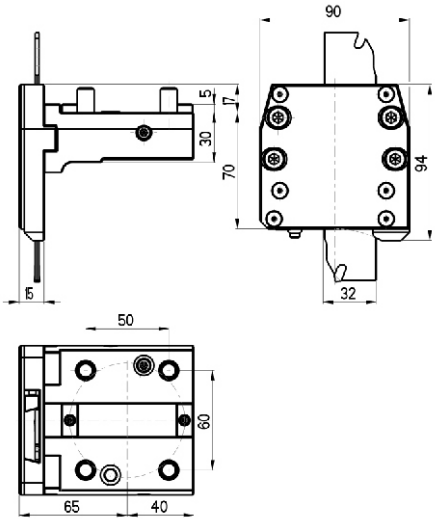

Cut off toolholder (left)

NGT CL-65x32(NT)
External cooling

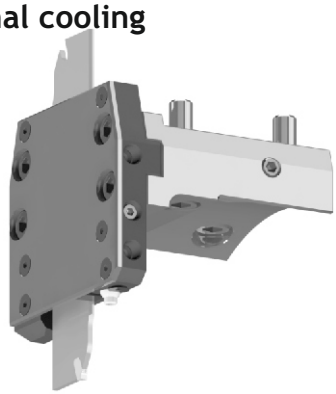

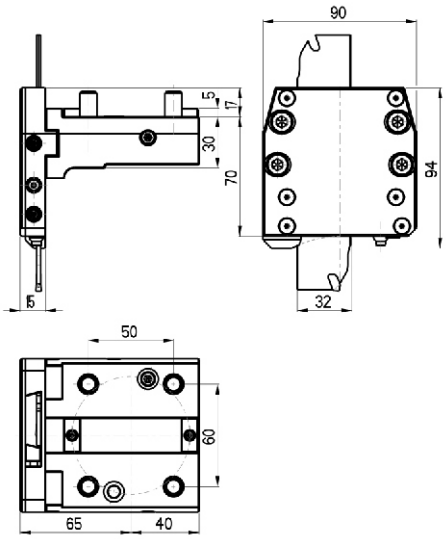

OKUMA LIVE AND STATIC TOOLHOLDERS BMT60

Okuma	LB2000 EX M
	LB2500 EX M
	LB3000 EX M

CONNECTION TURRET - OKUMA BMT60

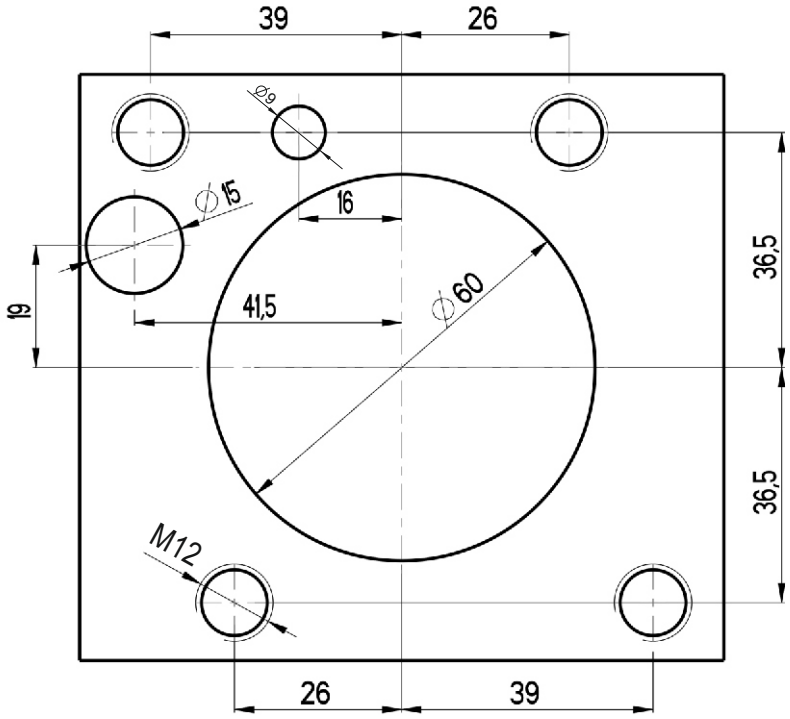

OKUMA LIVE TOOLHOLDERS BMT60

Straight BMT drilling and milling head

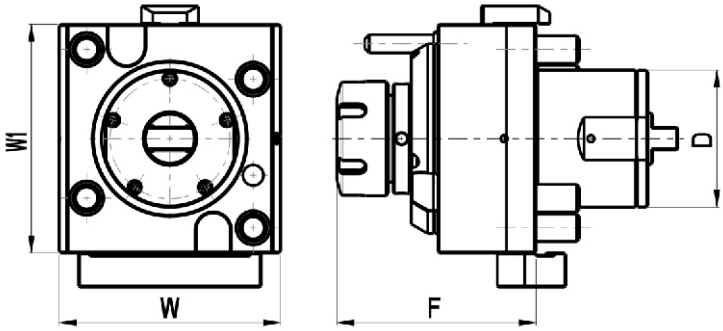

Code	D	Tool grip	Internal Cooling	F	W	W1	Torque [Nm]	Speed [rpm]	Ratio	P [bar]
NGT2-60/101-32/1(JA)	60	ER32	no	87	97	100	70	6000	1:1	-
NGT2-60/101-32/2(JA)	60	ER32	yes	87	97	100	70	6000	1:1	20

Angular BMT drilling and milling head

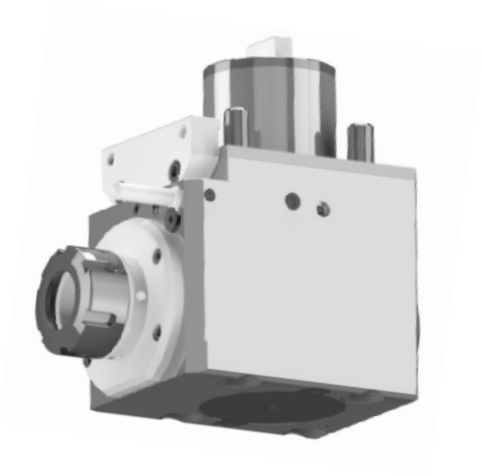

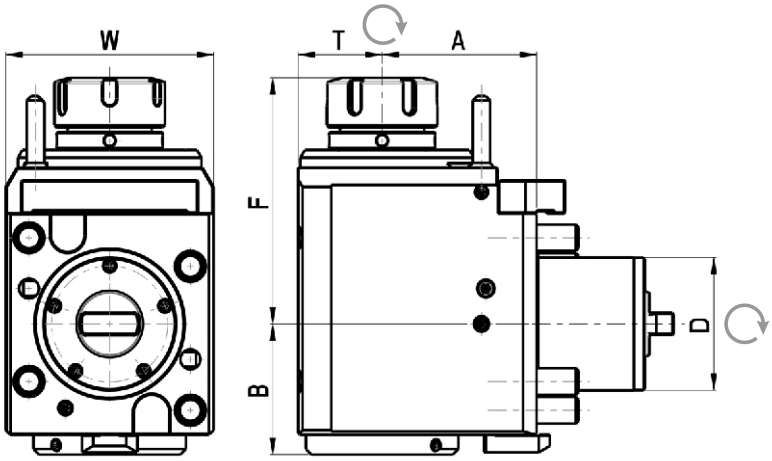

Code	D	Tool grip	Internal Cooling	Direction	A	B	F	T	W	Torque [Nm]	Speed [rpm]	Ratio	P [bar]
NGT2-60/201-32/1.3-70(JA)	60	ER32	no	right/left	70	59	111	38	94	70	6000	1:1	-
NGT2-60/201-32/2.3-70(JA)	60	ER32	yes	right/left	70	59	111	38	94	70	6000	1:1	20

* The straight, angular and variable toolholders can be equipped with Weldon shaft or shell-mill shaft upon request.

OKUMA STATIC TOOLHOLDERS BMT60

Universal turning holder

NGT OD-60x25x75(JA)
External cooling

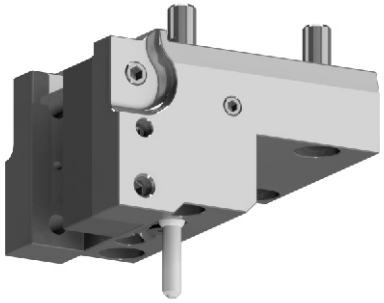

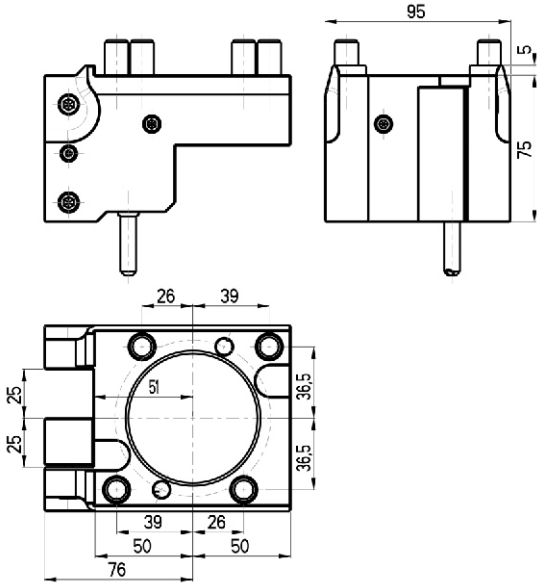

Universal turning face double holder

NGT F-60x25x70D(JA)
External cooling

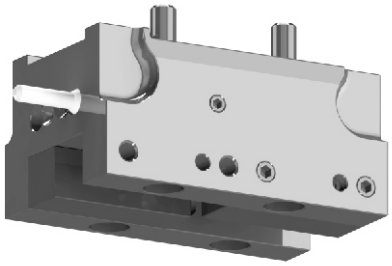

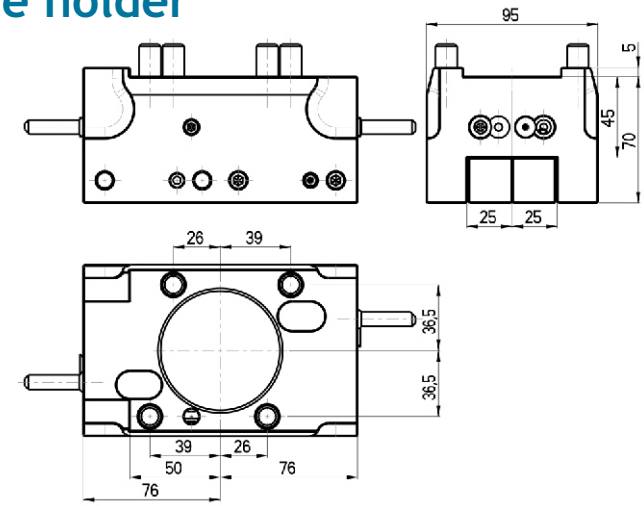

Boring bar holder

NGT ID-60x40x90(JA)
External/Internal cooling

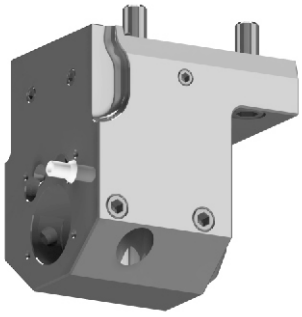

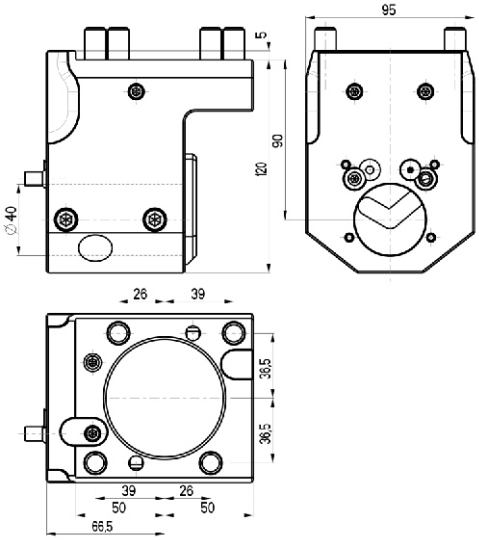

OKUMA LIVE AND STATIC TOOLHOLDERS BMT60

Okuma	LB4000 EX M

CONNECTION TURRET - OKUMA BMT60

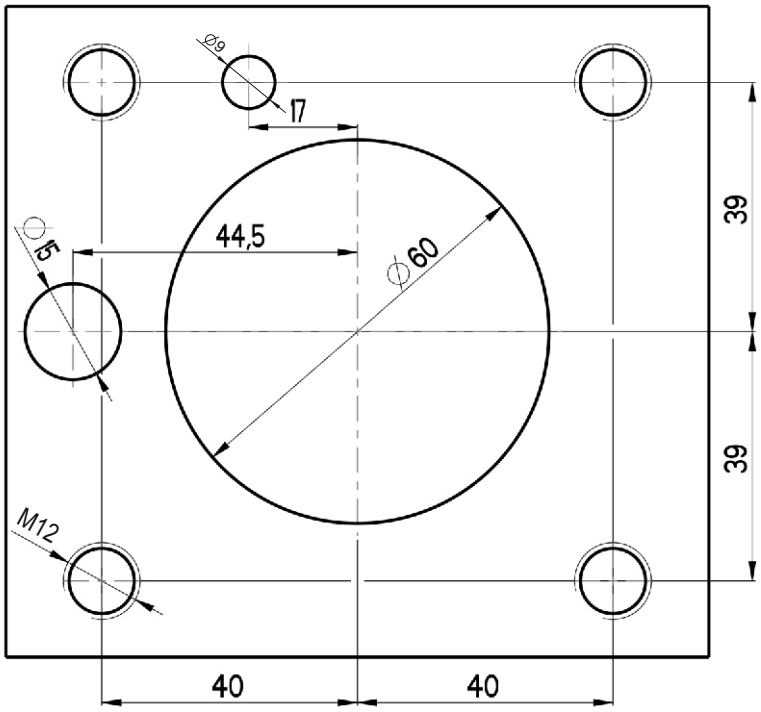

OKUMA LIVE TOOLHOLDERS BMT60

Straight BMT drilling and milling head

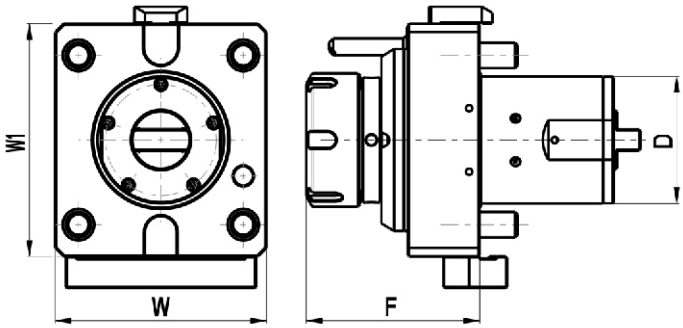

Code	D	Tool grip	Internal Cooling	F	W	W1	Torque [Nm]	Speed [rpm]	Ratio	P [bar]
NGT2-60/101-40/1(JB)	60	ER40	no	82	100	110	80	6000	1:1	-
NGT2-60/101-40/2(JB)	60	ER40	yes	82	100	110	80	6000	1:1	20

Angular BMT drilling and milling head

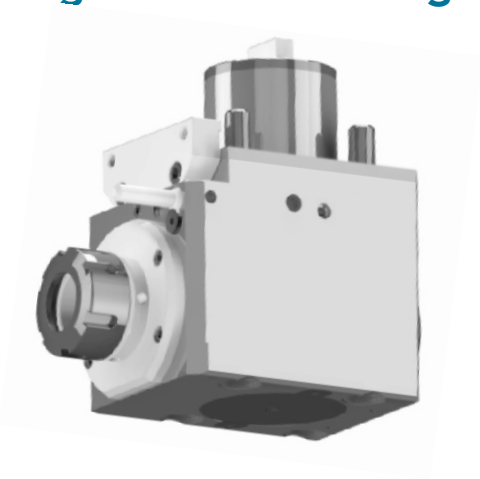

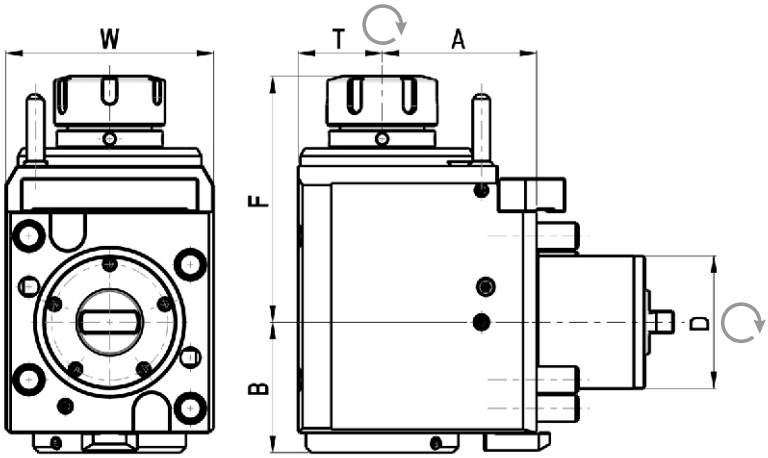

Code	D	Tool grip	Internal Cooling	Direction	A	B	F	T	W	Torque [Nm]	Speed [rpm]	Ratio	P [bar]
NGT2-60/201-40/1.3-85(JB)	60	ER40	no	right/left	85	64	121	44	100	80	6000	1:1	-
NGT2-60/201-40/2.3-85(JB)	60	ER40	yes	right/left	85	64	121	44	100	80	6000	1:1	20

OKUMA STATIC TOOLHOLDERS BMT60

Universal turning holder

NGT OD-60x25x75(JB)
External cooling

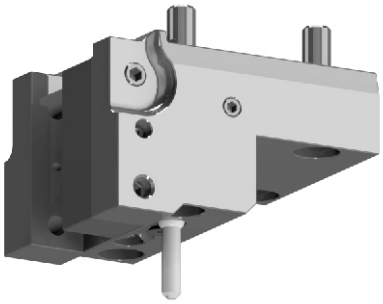

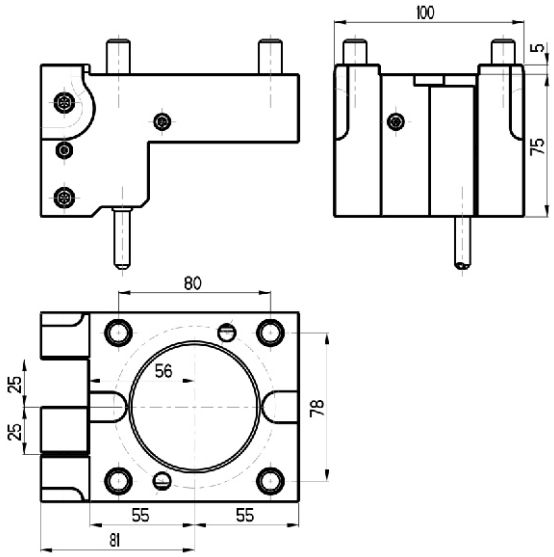

Universal turning face double holder

NGT F-60x25x70D(JB)
External cooling

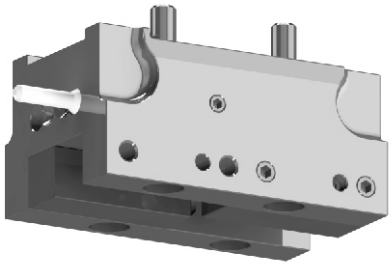

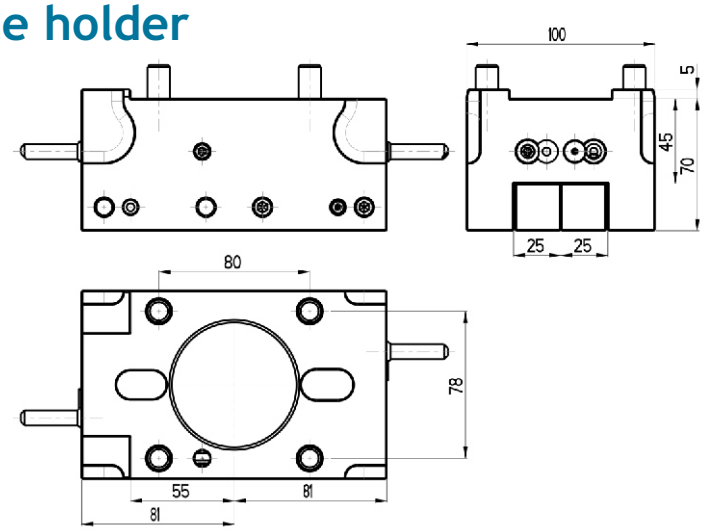

Boring bar holder

NGT ID-60x40x90(JB)
External/Internal cooling

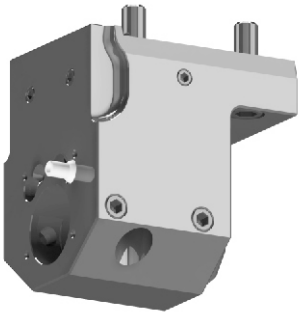

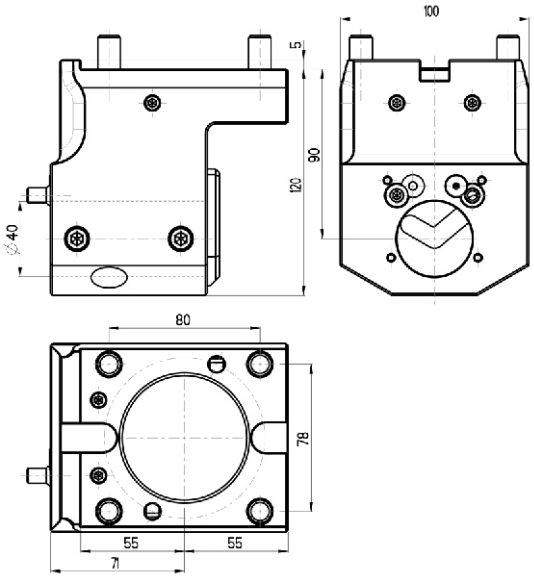

MORI SEIKI LIVE AND STATIC TOOLHOLDERS BMT60

MORI SEIKI BMT60	NL 1500/2000/2500/3000
	NLX 1500/2000/2500/3000
	NT 3250/4200/4250/4300/5400
	NZL 2500

CONNECTION TURRET - MORI SEIKI BMT60

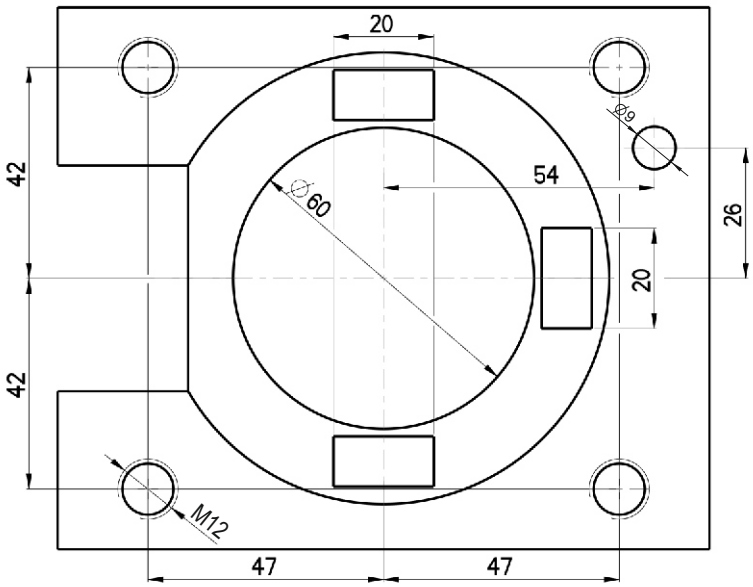

MORI SEIKI LIVE TOOLHOLDERS BMT60

Straight BMT drilling and milling head

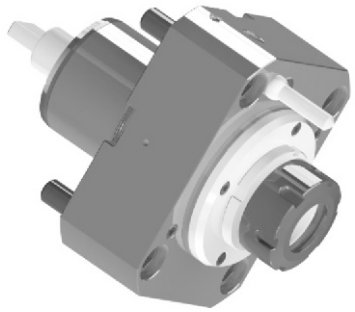

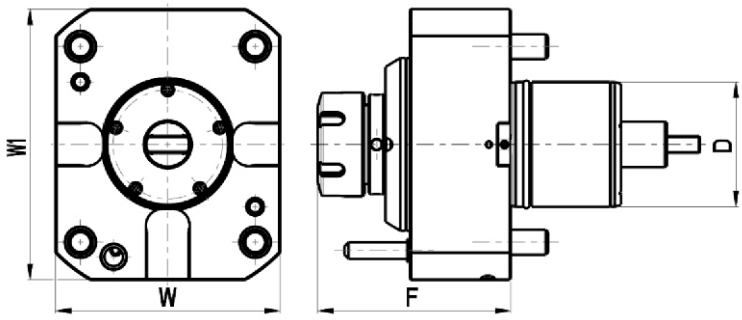

Code	D	Tool grip	Internal Cooling	F	W	W1	Torque [Nm]	Speed [rpm]	Ratio	P [bar]
NGT2-60/101-32/1(MS)	60	ER32	no	89	108	130	70	6000	1:1	-
NGT2-60/101-32/2(MS)	60	ER32	yes	89	108	130	70	6000	1:1	20

Angular BMT drilling and milling head

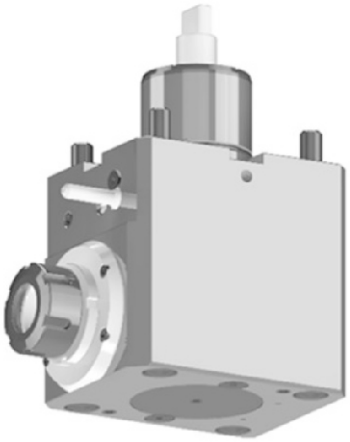

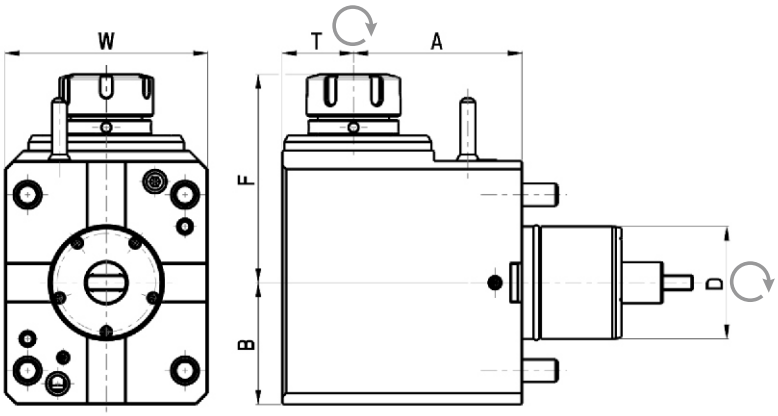

Code	D	Tool grip	Internal Cooling	Direction	A	B	F	T	W	Torque [Nm]	Speed [rpm]	Ratio	P [bar]
NGT2-60/201-32/1.3-90(MS)	60	ER32	no	right/left	90	65	107	38	108	70	6000	1:1	-
NGT2-60/201-32/2.3-90(MS)	60	ER32	yes	right/left	90	65	107	38	108	70	6000	1:1	20

* The straight, angular and variable toolholders can be equipped with Weldon shaft or shell-mill shaft upon request.

MORI SEIKI STATIC TOOLHOLDERS BMT60

Universal turning holder

NGT OD-60x25x68(MS)
External cooling

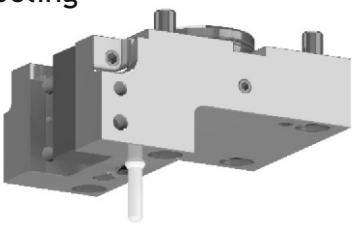

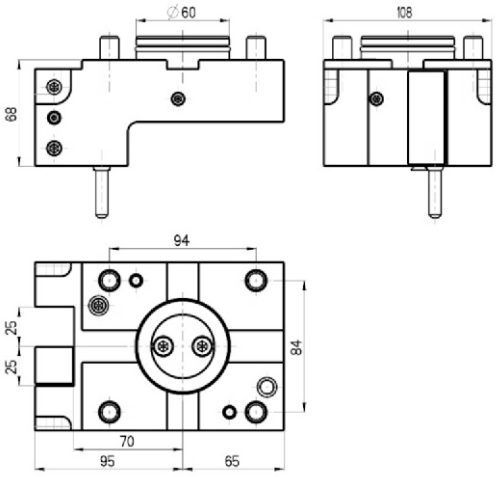

Boring bar holder

NGT ID-60x40x80(MS)
External/Internal cooling

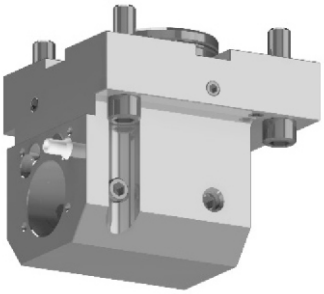

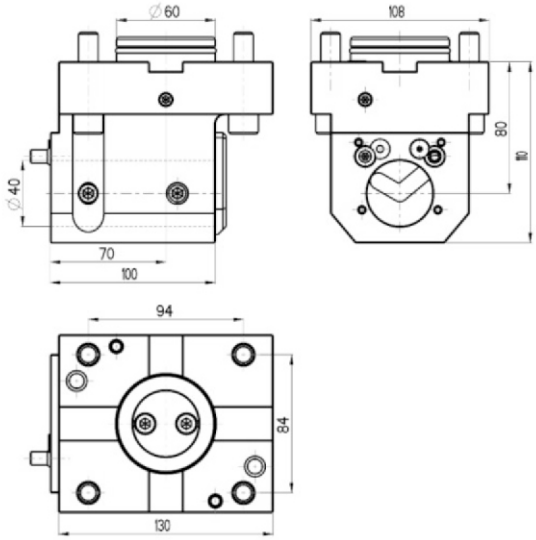

Boring bar holder

NGT ID-60x40x140(MS)
External/Internal cooling

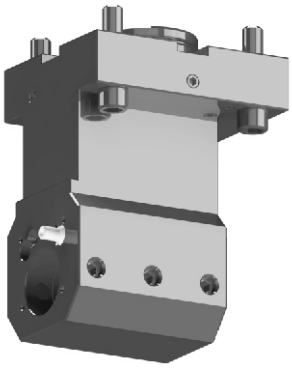

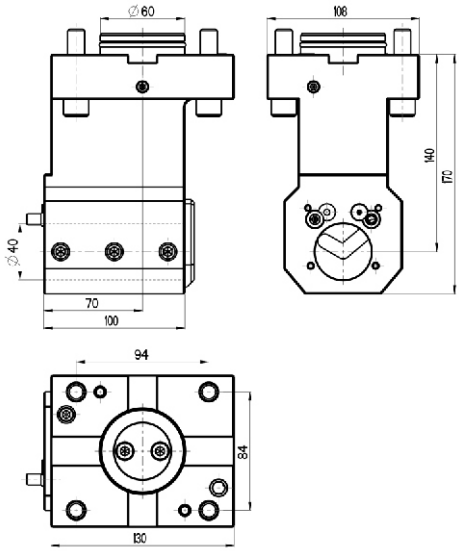

VDI TURRET TOOLHOLDERS

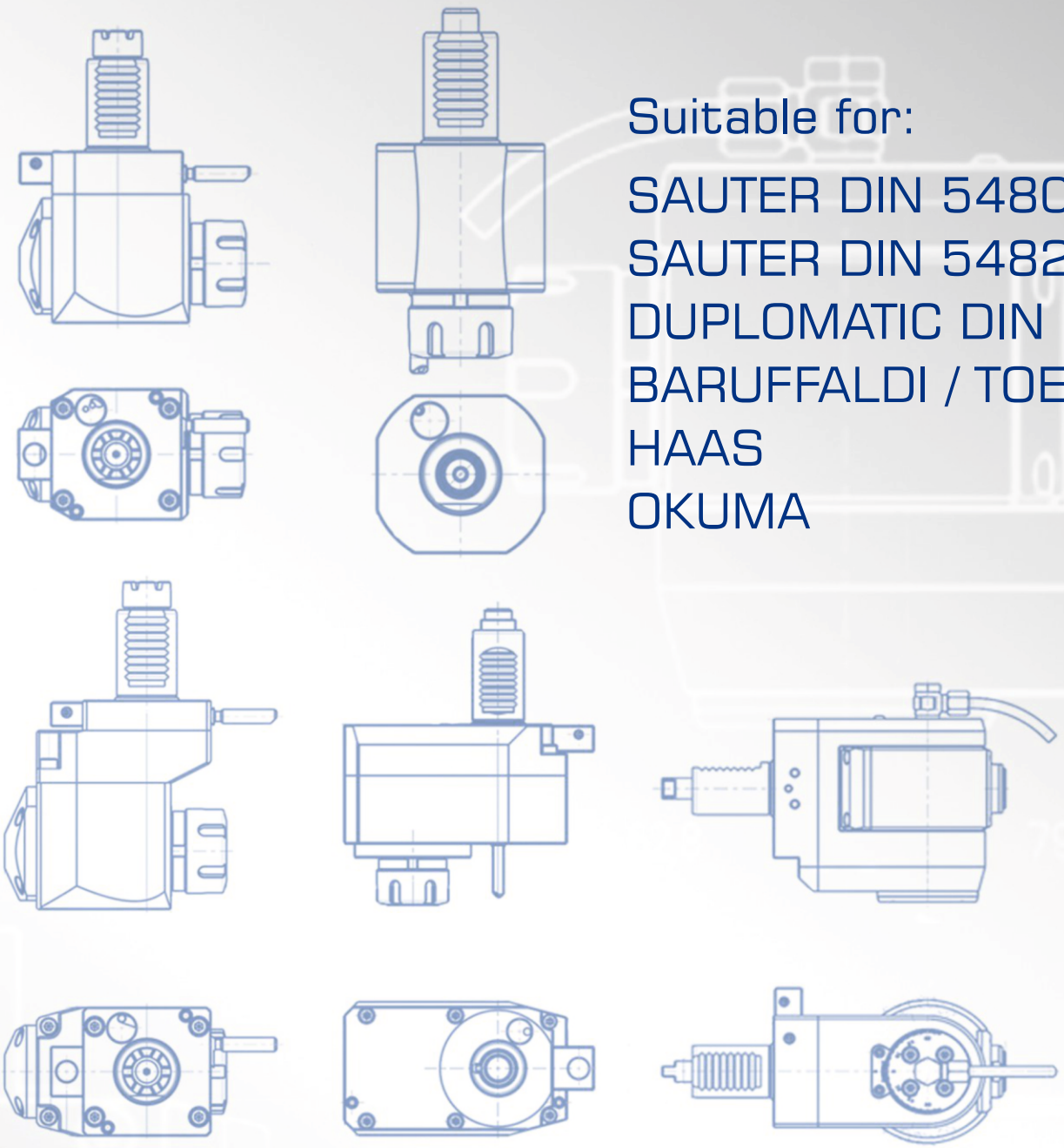

Suitable for:

SAUTER DIN 5480
SAUTER DIN 5482
DUPLOMATIC DIN 1809
BARUFFALDI / TOEM
HAAS
OKUMA

SAUTER TURRET DIN 5482

Straight drilling and milling head

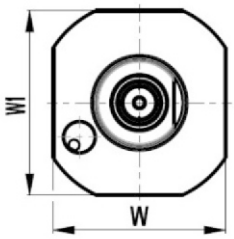

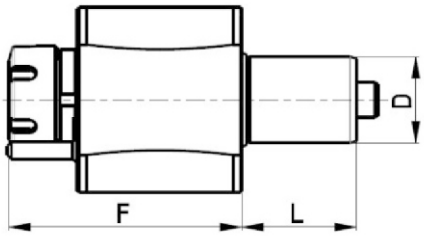

Code	D	Tool grip	Internal Cooling	F	L	W	W1	Torque [Nm]	Speed [rpm]	Ratio	P [bar]
NGT1-30/111-25/1	30	ER25	no	89	45	64	68	28	6000	1:1	-
NGT1-30/111-25/2	30	ER25	yes	89	45	64	68	28	6000	1:1	20
NGT1-40/111-25/1	40	ER25	no	105	53	80	86	50	6000	1:1	-
NGT1-40/111-25/2	40	ER25	yes	105	53	80	86	50	6000	1:1	20
NGT1-40/111-32/1	40	ER32	no	108	53	80	86	50	6000	1:1	-
NGT1-40/111-32/2	40	ER32	yes	108	53	80	86	50	6000	1:1	20

Angular drilling and milling head

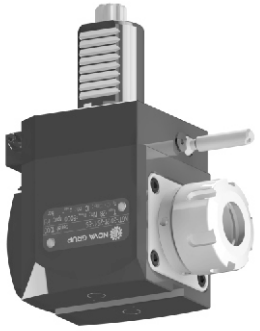

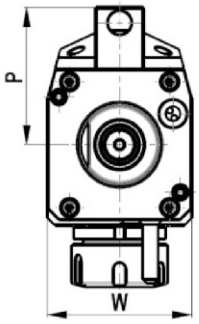

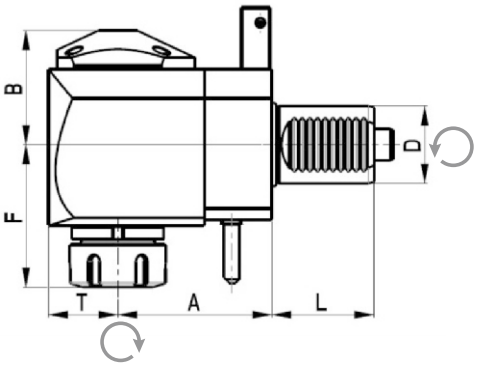

Code	D	Tool grip	Internal Cooling	Direction	A	B	F	L	P	T	W	Torque [Nm]	Speed [rpm]	Ratio	P [bar]
NGT1-30/211-25/1.2-55	30	ER25	no	left	55	48	64	45	48	29	64	28	6000	1:1	-
NGT1-30/211-25/2.2-55	30	ER25	yes	left	55	51	64	45	48	29	64	28	6000	1:1	20
NGT1-30/211-25/1.1-55	30	ER25	no	right	55	48	64	45	48	29	64	28	6000	1:1	-
NGT1-30/211-25/2.1-55	30	ER25	yes	right	55	51	64	45	48	29	64	28	6000	1:1	20
NGT1-40/211-25/1.1-80	40	ER25	no	right	80	59	70	53	71	36	75	50	6000	1:1	-
NGT1-40/211-25/2.1-80	40	ER25	yes	right	80	62	70	53	71	36	75	50	6000	1:1	20
NGT1-40/211-32/1.1-80	40	ER32	no	right	80	59	74	53	71	36	75	50	6000	1:1	-
NGT1-40/211-32/2.1-80	40	ER32	yes	right	80	62	74	53	71	36	75	50	6000	1:1	20
NGT1-40/211-25/1.2-80	40	ER25	no	left	80	59	70	53	71	36	75	50	6000	1:1	-
NGT1-40/211-25/2.2-80	40	ER25	yes	left	80	62	70	53	71	36	75	50	6000	1:1	20
NGT1-40/211-32/1.2-80	40	ER32	no	left	80	59	74	53	71	36	75	50	6000	1:1	-
NGT1-40/211-32/2.2-80	40	ER32	yes	left	80	62	74	53	71	36	75	50	6000	1:1	20

SAUTER TURRET DIN 5482

Offset straight driling and milling head

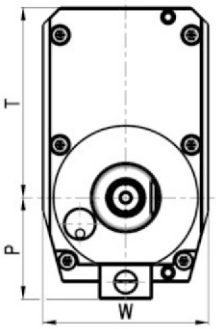

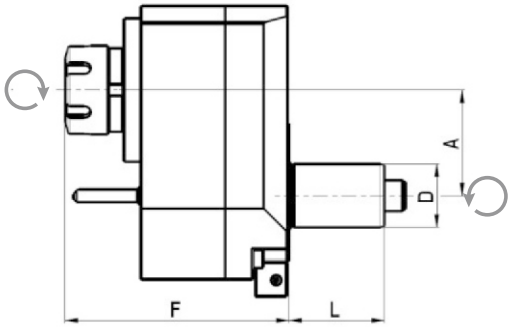

Code	D	Tool grip	Internal Cooling	Direction	A	F	L	P	T	W	Torque [Nm]	Speed [rpm]	Ratio
NGT1-30/311-25/1.1-50(1:2)	30	ER25	no	right	50	106	45	48	90	78	14	12000	1:2
NGT1-30/311-25/1.1-50(2:1)	30	ER25	no	right	50	106	45	48	90	78	40	3000	2:1

Offset angular driling and milling head

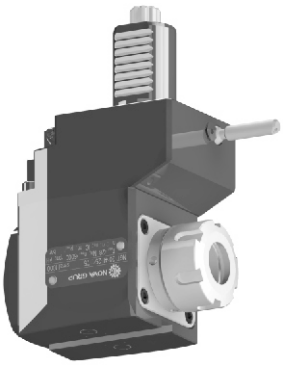

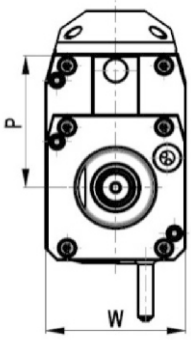

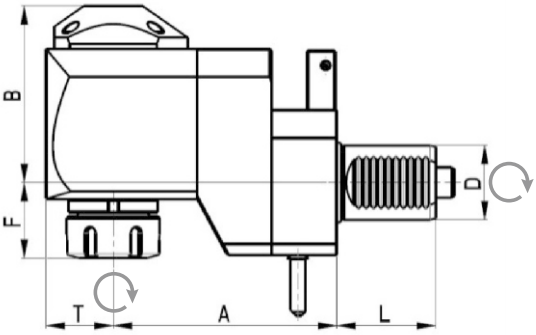

Code	D	Tool grip	Internal Cooling	Direction	A	B	F	L	P	T	W	Torque [Nm]	Speed [rpm]	Ratio	P [bar]
NGT1-30/411-25/1.1-75	30	ER25	no	right	75	71	40	45	48	29	64	28	6000	1:1	-
NGT1-30/411-25/2.1-75	30	ER25	yes	right	75	74	40	45	48	29	64	28	6000	1:1	20
NGT1-30/411-25/1.2-75	30	ER25	no	left	75	71	40	45	48	29	64	28	6000	1:1	-
NGT1-30/411-25/2.2-75	30	ER25	yes	left	75	74	40	45	48	29	64	28	6000	1:1	20
NGT1-40/411-25/1.1-120	40	ER25	no	right	120	92	37	53	71	36	75	50	6000	1:1	-
NGT1-40/411-25/2.1-120	40	ER25	yes	right	120	95	37	53	71	36	75	50	6000	1:1	20
NGT1-40/411-32/1.1-120	40	ER32	no	right	120	92	41	53	71	36	75	50	6000	1:1	-
NGT1-40/411-32/2.1-120	40	ER32	yes	right	120	95	41	53	71	36	75	50	6000	1:1	20

SAUTER TURRET DIN 5482

Variable angle drilling and milling head

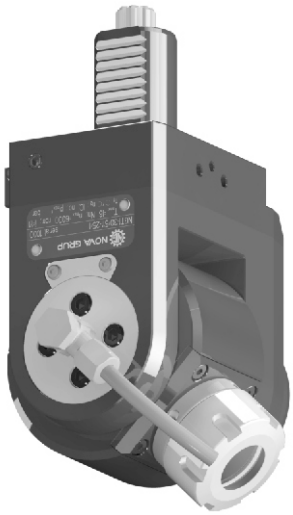

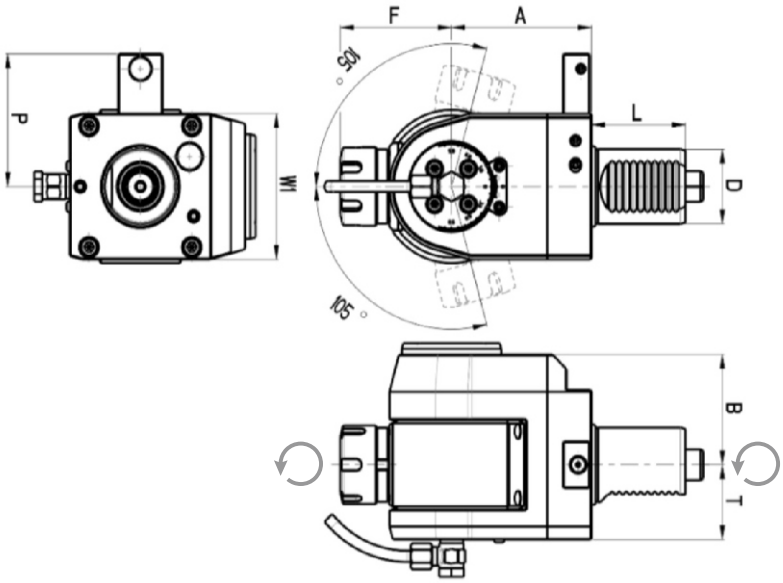

Code	D	Tool grip	Internal Cooling	Direction	A	B	F	L	P	T	W1	Torque [Nm]	Speed [rpm]	Ratio	P [bar]
NGT1-30/511-16/1	30	ER16	no	right/left	79	59	43	45	48	40	64	16	6000	1:1	-
NGT1-30/511-16/2	30	ER16	yes	right/left	86	59	43	45	48	40	64	16	6000	1:1	20
NGT1-30/511-25/1	30	ER25	no	right/left	79	59	64	45	48	40	64	16	6000	1:1	-
NGT1-30/511-25/2	30	ER25	yes	right/left	86	59	64	45	48	40	64	16	6000	1:1	20
NGT1-40/511-25/1	40	ER25	no	right/left	79	59	64	53	71	40	78	16	6000	1:1	-
NGT1-40/511-25/2	40	ER25	yes	right/left	86	59	64	53	71	40	78	16	6000	1:1	20

SAUTER TURRET DIN 5480

Straight drilling and milling head

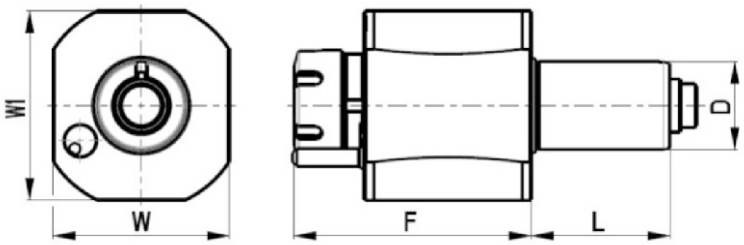

Code	D	Tool grip	Internal Cooling	F	L	W	W1	Torque [Nm]	Speed [rpm]	Ratio	P [bar]
NGT1-30/131-25/1	30	ER25	no	89	55	64	68	28	6000	1:1	-
NGT1-30/131-25/2	30	ER25	yes	89	55	64	68	28	6000	1:1	20
NGT1-30/133-16/1	30	shell mill 16	no	93.5	55	64	68	28	6000	1:1	-
NGT1-40/131-25/1	40	ER25	no	105	64	80	86	50	6000	1:1	-
NGT1-40/131-25/2	40	ER25		105	64	80	86	50	6000	1:1	20
NGT1-40/131-32/1	40	ER32	no	108	64	80	86	50	6000	1:1	-
NGT1-40/131-32/2	40	ER32	yes	108	64	80	86	50	6000	1:1	20
NGT1-40/133-22/1	40	shell mill 22	no	115.5	64	80	86	50	6000	1:1	-
NGT1-40/133-16/1	40	shell mill 16	no	112.5	64	80	86	50	6000	1:1	-

Angular drilling and milling head with Weldon shaft

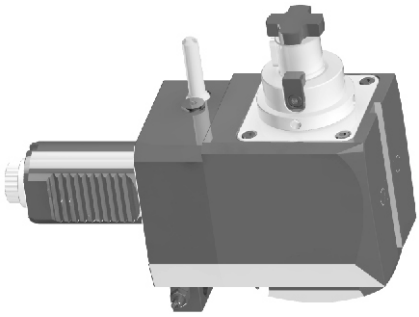

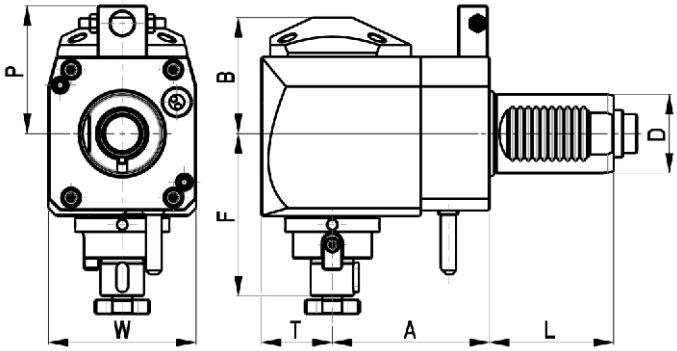

Code	D	Tool grip	I.C.	Direction	A	B	F	L	P	T	W	Torque [Nm]	Speed [rpm]	Ratio	P [bar]
NGT1-40/233-16/1.1-80	40	Ø16	no	right	80	59	76.5	63	65	36	75	50	6000	1:1	-
NGT1-40/233-22/1.1-80	40	Ø22	no	right	80	59	76.5	63	65	36	75	50	6000	1:1	-

SAUTER TURRET DIN 5480

Angular drilling and milling head

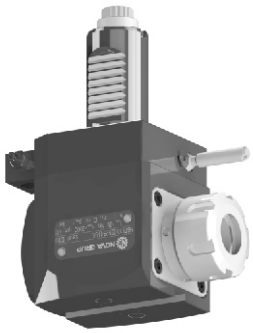

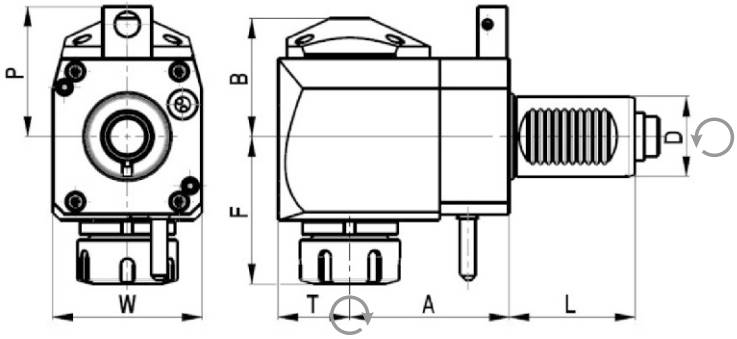

Code	D	Tool grip	I.C.	Direction	A	B	F	L	P	T	W	Torque [Nm]	Speed [rpm]	Ratio	P [bar]
NGT1-30/231-25/1.1-55	30	ER25	no	right	55	48	64	55	56	29	64	28	6000	1:1	-
NGT1-30/231-25/2.1-55	30	ER25	yes	right	55	51	64	55	56	29	64	28	6000	1:1	20
NGT1-30/231-25/1.1-85	30	ER25	no	right	85	48	64	55	56	29	64	28	6000	1:1	-
NGT1-30/231-25/2.1-85	30	ER25	yes	right	85	51	64	55	56	29	64	28	6000	1:1	20
NGT1-30/231-25/1.1-100	30	ER25	no	right	100	48	64	55	56	29	64	28	6000	1:1	-
NGT1-30/231-25/2.1-100	30	ER25	yes	right	100	51	64	55	56	29	64	28	6000	1:1	20
NGT1-30/231-25/2.2-100	30	ER25	yes	left	100	51	64	55	56	29	64	28	6000	1:1	20
NGT1-30/231-25/1.2-100	30	ER25	yes	right	100	48	64	55	56	29	64	28	6000	1:1	-
NGT1-30/231-25/1.2-55	30	ER25	no	left	55	48	64	55	56	29	64	28	6000	1:1	-
NGT1-30/231-25/2.2-55	30	ER25	yes	left	55	51	64	55	56	29	64	28	6000	1:1	20
NGT1-30/231-25/1.2-85	30	ER25	no	left	85	48	64	55	56	29	64	28	6000	1:1	-
NGT1-30/231-25/2.2-85	30	ER25	yes	left	85	51	64	55	56	29	64	28	6000	1:1	20
NGT1-40/231-25/1.1-80	40	ER25	no	right	80	59	70	64	65	36	75	50	6000	1:1	-
NGT1-40/231-25/2.1-80	40	ER25	yes	right	80	62	70	64	65	36	75	50	6000	1:1	20
NGT1-40/231-32/1.1-80	40	ER32	no	right	80	59	74	64	65	36	75	50	6000	1:1	-
NGT1-40/231-32/2.1-80	40	ER32	yes	right	80	62	74	64	65	36	75	50	6000	1:1	20
NGT1-40/231-25/1.1-100	40	ER25	no	right	100	59	70	64	65	36	75	50	6000	1:1	-
NGT1-40/231-25/2.1-100	40	ER25	yes	right	100	62	70	64	65	36	75	50	6000	1:1	20
NGT1-40/231-32/1.1-100	40	ER32	no	right	100	59	74	64	65	36	75	50	6000	1:1	-
NGT1-40/231-32/2.1-100	40	ER32	yes	right	100	62	74	64	65	36	75	50	6000	1:1	20
NGT1-40/231-25/1.2-80	40	ER25	no	left	80	59	70	64	65	36	75	50	6000	1:1	-
NGT1-40/231-25/2.2-80	40	ER25	yes	left	80	62	70	64	65	36	75	50	6000	1:1	20
NGT1-40/231-32/1.2-80	40	ER32	no	left	80	59	74	64	65	36	75	50	6000	1:1	-
NGT1-40/231-32/2.2-80	40	ER32	yes	left	80	62	74	64	65	36	75	50	6000	1:1	20
NGT1-40/231-25/1.2-100	40	ER25	no	left	100	59	70	64	65	36	75	50	6000	1:1	-
NGT1-40/231-25/2.2-100	40	ER25	yes	left	100	62	70	64	65	36	75	50	6000	1:1	20
NGT1-40/231-32/1.2-100	40	ER32	no	left	100	59	74	64	65	36	75	50	6000	1:1	-
NGT1-40/231-32/2.2-100	40	ER32	yes	left	100	62	74	64	65	36	75	50	6000	1:1	20
NGT1-40/233-22/1.1-80	40	shell mill 22	no	right	80	59	79.5	64	65	36	75	50	6000	1:1	-
NGT1-40/233-16/1.1-80	40	shell mill 16	no	right	80	62	76.5	64	65	36	75	50	6000	1:1	-

SAUTER TURRET DIN 5480

Offset straight drilling and milling head

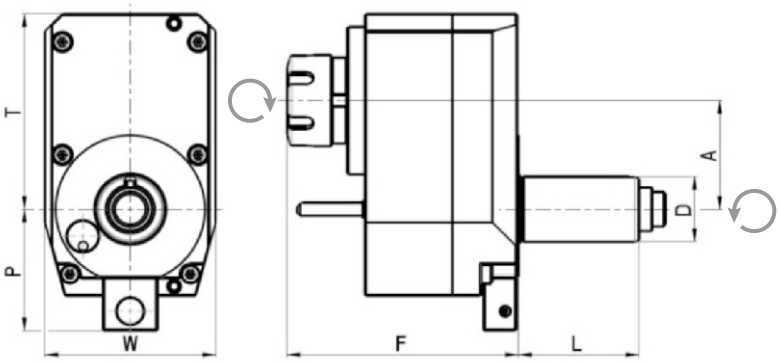

Code	D	Tool grip	IC	Direction	A	F	L	P	T	W	Torque [Nm]	Speed [rpm]	Ratio
NGT1-30/331-25/1.1-50(1:2)	30	ER25	no	right	50	106	55	56	90	78	14	12000	1:2
NGT1-30/331-25/1.1-50(2:1)	30	ER25	no	right	50	106	55	56	90	78	40	3000	2:1

Offset angular drilling and milling head

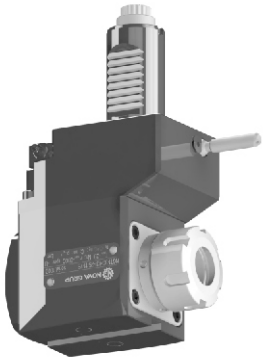

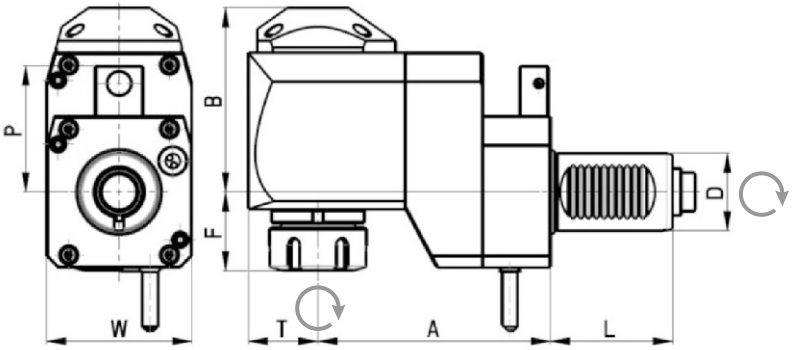

Code	D	Tool grip	IC	Direction	A	B	F	L	P	T	W	Torque [Nm]	Speed [rpm]	Ratio	P [bar]
NGT1-30/431-25/1.1-75	30	ER25	no	right	75	71	40	55	56	29	64	28	6000	1:1	-
NGT1-30/431-25/2.1-75	30	ER25	yes	right	75	74	40	55	56	29	64	28	6000	1:1	20
NGT1-40/431-25/1.1-120	40	ER25	no	right	120	92	37	64	65	36	75	50	6000	1:1	-
NGT1-40/431-25/2.1-120	40	ER25	yes	right	120	95	37	64	65	36	75	50	6000	1:1	20
NGT1-40/431-32/1.1-120	40	ER32	no	right	120	92	41	64	65	36	75	50	6000	1:1	-
NGT1-40/431-32/2.1-120	40	ER32	yes	right	120	95	41	64	65	36	75	50	6000	1:1	20

SAUTER TURRET DIN 5480

Variable angle drilling and milling head

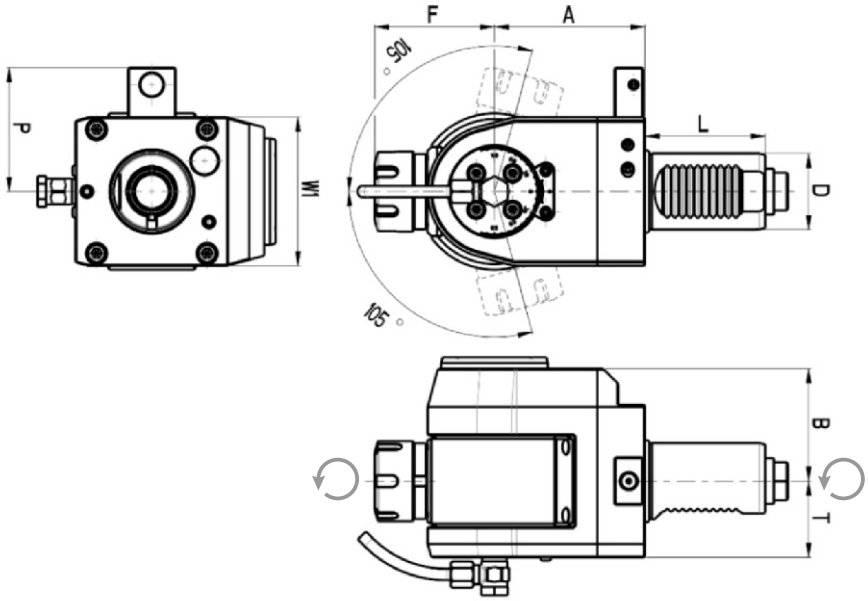

Code	D	Tool grip	Internal Cooling	Direction	A	B	F	L	P	T	W1	Torque [Nm]	Speed [rpm]	Ratio	P [bar]
NGT1-30/531-16/1	30	ER16	no	right/left	79	59	43	55	56	40	64	16	6000	1:1	-
NGT1-30/531-16/2	30	ER16	yes	right/left	86	59	43	55	56	40	64	16	6000	1:1	20
NGT1-30/531-25/1	30	ER25	no	right/left	79	59	43	55	56	40	64	16	6000	1:1	-
NGT1-30/531-25/2	30	ER25	yes	right/left	86	59	43	55	56	40	64	16	6000	1:1	20
NGT1-40/531-25/1	40	ER25	no	right/left	79	59	64	64	65	40	78	16	6000	1:1	-
NGT1-40/531-25/2	40	ER25	yes	right/left	86	59	64	64	65	40	78	16	6000	1:1	20

* The straight, angular and variable toolholders can be equipped with Weldon shaft or shell-mill shaft upon request.

DUPLOMATIC TURRET DIN 1809

Straight drilling and milling head

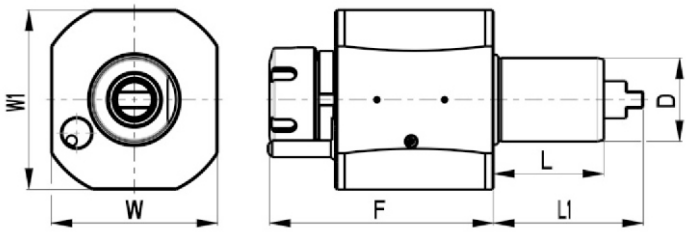

Code	D	Tool grip	IC	F	L	L1	W	W1	Torque [Nm]	Speed [rpm]	Ratio	P [bar]
NGT1-30/121-25/1	30	ER25	no	89	45	62	64	68	28	6000	1:1	-
NGT1-30/121-25/2	30	ER25	yes	89	45	62	64	68	28	6000	1:1	20
NGT1-30/121-25/1B	30	ER25	no	89	55	67	64	68	28	6000	1:1	-
NGT1-30/121-25/2B	30	ER25	yes	89	55	67	64	68	28	6000	1:1	20
NGT1-40/121-25/1	40	ER25	no	105	53	72	80	86	50	6000	1:1	-
NGT1-40/121-25/2	40	ER25	yes	105	53	72	80	86	50	6000	1:1	20
NGT1-40/121-32/1	40	ER32	no	108	53	72	80	86	50	6000	1:1	-
NGT1-40/121-32/2	40	ER32	yes	108	53	72	80	86	50	6000	1:1	20
NGT1-40/121-32/1S	40	ER32	no	95	53	72	80	86	50	6000	1:1	-
NGT1-40/121-32/2S	40	ER32	yes	95	53	72	80	86	50	6000	1:1	20

Offset straight drilling and milling head

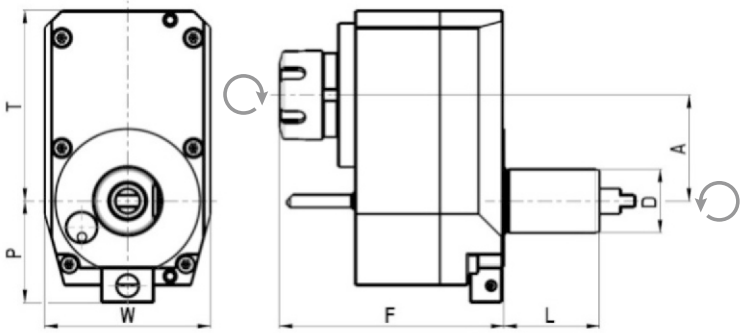

Code	D	Tool grip	IC	Direction	A	F	L	P	T	W	Torque [Nm]	Speed [rpm]	Ratio	P [bar]
NGT1-30/321-25/1.1-50(1:2)	30	ER25	no	right	50	106	45	48	90	78	14	12000	1:2	-
NGT1-30/321-25/1.1-50(2:1)	30	ER25	no	right	50	106	45	48	90	78	40	3000	2:1	-

DUPLOMATIC TURRET DIN 1809

Angular drilling and milling head

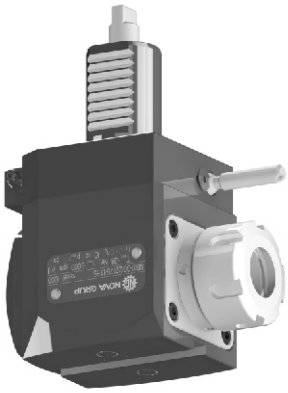

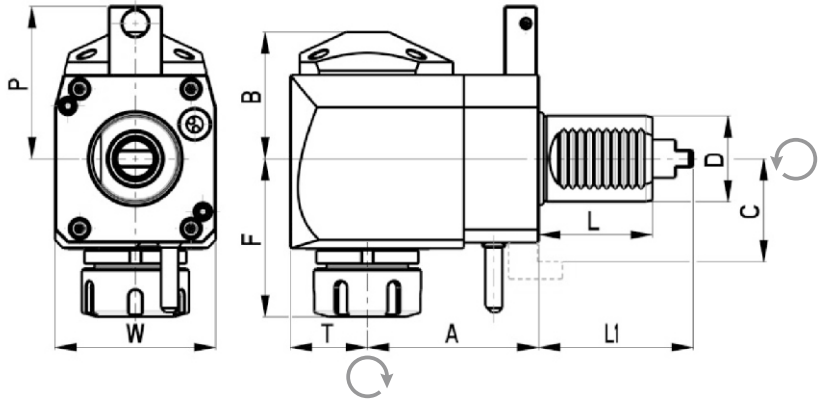

Code	D	Tool grip	IC	Direction	A	B	F	L	L1	P	C	T	W	Torque [Nm]	Speed [rpm]	Ratio	P [bar]
NGT1-30/221-25/1.1-55	30	ER25	no	right	55	48	64	45	62	48	-	29	64	28	6000	1:1	-
NGT1-30/221-25/2.1-55	30	ER25	yes	right	55	51	64	45	62	48	-	29	64	28	6000	1:1	20
NGT1-30/221-25/1.1-55B	30	ER25	no	right	55	48	64	55	67	48	-	29	64	28	6000	1:1	-
NGT1-30/221-25/2.1-55B	30	ER25	yes	right	55	51	64	55	67	48	-	29	64	28	6000	1:1	20
NGT1-30/221-25/1.2-55B	30	ER25	no	left	55	48	64	55	67	48	-	29	64	28	6000	1:1	-
NGT1-30/221-25/2.2-55B	30	ER25	yes	left	55	51	64	55	67	48	-	29	64	28	6000	1:1	20
NGT1-40/221-25/1.1-80	40	ER25	no	right	80	59	72	53	72	71	-	36	75	50	6000	1:1	-
NGT1-40/221-25/2.1-80	40	ER25	yes	right	80	62	72	53	72	71	-	36	75	50	6000	1:1	20
NGT1-40/221-32/1.1-80	40	ER32	no	right	80	59	75	53	72	71	-	36	75	50	6000	1:1	-
NGT1-40/221-32/2.1-80	40	ER32	yes	right	80	62	75	53	72	71	-	36	75	50	6000	1:1	20
NGT1-40/221-25/1.2-80	40	ER25	no	left	80	59	72	53	72	71	-	36	75	50	6000	1:1	-
NGT1-40/221-25/2.2-80	40	ER25	yes	left	80	62	72	53	72	71	-	36	75	50	6000	1:1	20
NGT1-40/221-32/1.2-80	40	ER32	no	left	80	59	75	53	72	71	-	36	75	50	6000	1:1	-
NGT1-40/221-32/2.2-80	40	ER32	yes	left	80	62	75	53	72	71	-	36	75	50	6000	1:1	20
NGT1-40/221-25/1.2-100D	40	ER25	no	left	100	59	72	53	72	-	48	36	75	50	6000	1:1	-
NGT1-40/221-25/2.2-100D	40	ER25	yes	left	100	62	72	53	72	-	48	36	75	50	6000	1:1	20
NGT1-40/221-32/1.2-100D	40	ER32	no	left	100	59	75	53	72	-	48	36	75	50	6000	1:1	-
NGT1-40/221-32/2.2-100D	40	ER32	yes	left	100	62	75	53	72	-	48	36	75	50	6000	1:1	20
NGT1-40/221-25/1.2-100	40	ER25	no	left	100	59	72	53	72	-	48	36	75	50	6000	1:1	-
NGT1-40/221-25/2.2-100	40	ER25	yes	left	100	62	72	53	72	-	48	36	75	50	6000	1:1	20
NGT1-40/221-32/1.2-100	40	ER32	no	left	100	59	75	53	72	-	48	36	75	50	6000	1:1	-
NGT1-40/221-32/2.2-100	40	ER32	yes	left	100	62	75	53	72	-	48	36	75	50	6000	1:1	20

DUPLOMATIC TURRET DIN 1809

Offset angular drilling and milling head

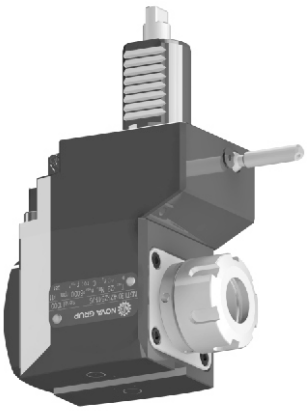

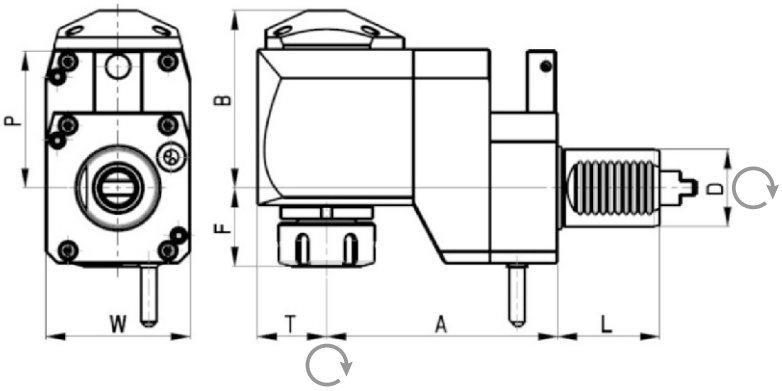

Code	D	Tool grip	IC	Direction	A	B	F	L	P	T	W	Torque [Nm]	Speed [rpm]	Ratio	P [bar]
NGT1-30/421-25/1.1-75	30	ER25	no	right	75	71	40	45	48	29	64	28	6000	1:1	-
NGT1-30/421-25/2.1-75	30	ER25	yes	right	75	74	40	45	48	29	64	28	6000	1:1	20
NGT1-30/421-25/1.2-75B	30	ER25	no	left	75	71	40	45	48	29	64	28	6000	1:1	-
NGT1-30/421-25/2.2-75B	30	ER25	yes	left	75	74	40	45	48	29	64	28	6000	1:1	20
NGT1-40/421-25/1.1-120	40	ER25	no	right	120	92	37	53	71	36	75	50	6000	1:1	-
NGT1-40/421-25/2.1-120	40	ER25	yes	right	120	95	37	53	71	36	75	50	6000	1:1	20
NGT1-40/421-32/1.1-120	40	ER32	no	right	120	92	41	53	71	36	75	50	6000	1:1	-
NGT1-40/421-32/2.1-120	40	ER32	yes	right	120	95	41	53	71	36	75	50	6000	1:1	20

DUPLOMATIC TURRET DIN 1809

Variable angle drilling and milling head

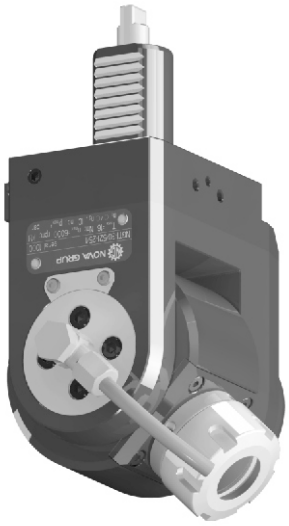

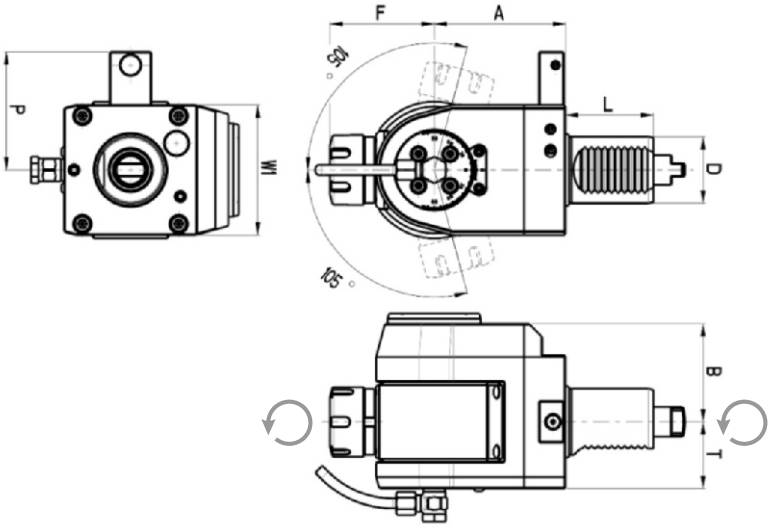

Code	D	Tool grip	IC	Direction	A	B	F	L	P	T	W1	Torque [Nm]	Speed [rpm]	Ratio	P [bar]
NGT1-30/521-16/1	30	ER16	no	right/left	79	59	43	45	48	40	64	16	6000	1:1	-
NGT1-30/521-16/2	30	ER16	yes	right/left	86	59	43	45	48	40	64	16	6000	1:1	20
NGT1-30/521-25/1	30	ER25	no	right/left	79	59	43	45	48	40	64	16	6000	1:1	-
NGT1-30/521-25/2	30	ER25	yes	right/left	86	59	43	45	48	40	64	16	6000	1:1	20
NGT1-30/521-16/1B	30	ER16	no	right/left	79	59	64	55	48	40	64	16	6000	1:1	-
NGT1-30/521-16/2B	30	ER16	yes	right/left	86	59	64	55	48	40	64	16	6000	1:1	20
NGT1-30/521-25/1B	30	ER25	no	right/left	79	59	64	55	48	40	64	16	6000	1:1	-
NGT1-30/521-25/2B	30	ER25	yes	right/left	86	59	64	55	48	40	64	16	6000	1:1	20
NGT1-40/521-25/1	40	ER25	no	right/left	79	59	64	53	71	40	78	16	6000	1:1	-
NGT1-40/521-25/2	40	ER25	yes	right/left	86	59	64	53	71	40	78	16	6000	1:1	20

* The straight, angular and variable toolholders can be equipped with Weldon shaft or shell-mill shaft upon request.

BARUFFALDI / TOEM TURRET

Straight drilling and milling head

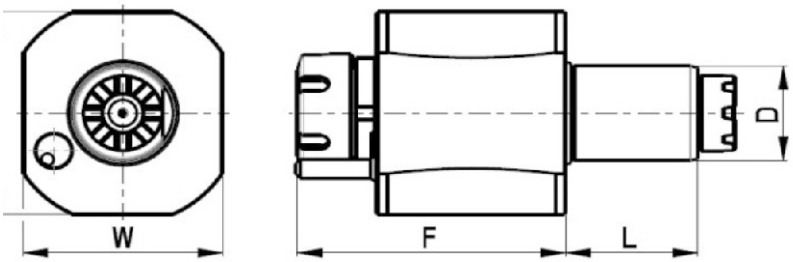

Code	D	Tool grip	IC	F	L	W	W1	Torque [Nm]	Speed [rpm]	Ratio	P [bar]
NGT1-30/141-25/1	30	ER25	no	89	45	64	68	28	6000	1:1	-
NGT1-30/141-25/2	30	ER25	yes	89	45	64	68	28	6000	1:1	20
NGT1-40/141-25/1	40	ER25	no	105	53	80	86	50	6000	1:1	-
NGT1-40/141-25/2	40	ER25	yes	105	53	80	86	50	6000	1:1	20
NGT1-40/141-32/1	40	ER32	no	108	53	80	86	50	6000	1:1	-
NGT1-40/141-32/2	40	ER32	yes	108	53	80	86	50	6000	1:1	20

BARUFFALDI / TOEM TURRET

Angular drilling and milling head

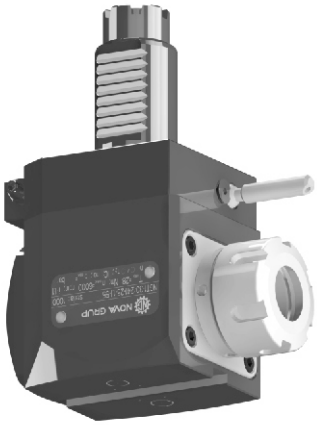

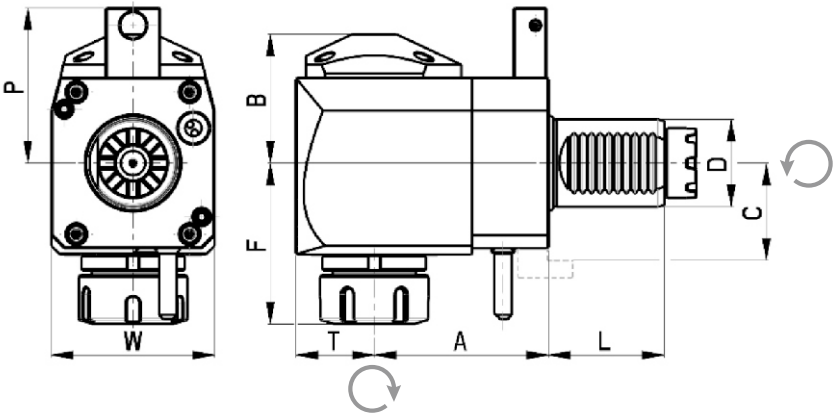

Code	D	Tool grip	IC	Direction	A	B	F	L	P	C	T	W	Torque [Nm]	Speed [rpm]	Ratio	P [bar]
NGT1-30/241-25/1.1-55	30	ER25	no	right	55	48	64	45	48	-	29	64	28	6000	1:1	-
NGT1-30/241-25/2.1-55	30	ER25	yes	right	55	51	64	45	48	-	29	64	28	6000	1:1	20
NGT1-30/241-25/1.1-85	30	ER25	no	right	85	48	64	45	48	-	29	64	28	6000	1:1	-
NGT1-30/241-25/2.1-85	30	ER25	yes	right	85	51	64	45	48	-	29	64	28	6000	1:1	20
NGT1-30/241-25/1.2-55	30	ER25	no	left	55	48	64	45	48	-	29	64	28	6000	1:1	-
NGT1-30/241-25/2.2-55	30	ER25	yes	left	55	51	64	45	48	-	29	64	28	6000	1:1	20
NGT1-30/241-25/1.2-85	30	ER25	no	left	85	48	64	45	48	-	29	64	28	6000	1:1	-
NGT1-30/241-25/2.2-85	30	ER25	yes	left	85	51	64	45	48	-	29	64	28	6000	1:1	20
NGT1-40/241-25/1.1-80	40	ER25	no	right	80	59	70	53	71	-	36	75	50	6000	1:1	-
NGT1-40/241-25/2.1-80	40	ER25	yes	right	80	62	70	53	71	-	36	75	50	6000	1:1	20
NGT1-40/241-32/1.1-80	40	ER32	no	right	80	59	74	53	71	-	36	75	50	6000	1:1	-
NGT1-40/241-32/2.1-80	40	ER32	yes	right	80	62	74	53	71	-	36	75	50	6000	1:1	20
NGT1-40/241-25/1.2-80	40	ER25	no	left	80	59	70	53	71	-	36	75	50	6000	1:1	-
NGT1-40/241-25/2.2-80	40	ER25	yes	left	80	62	70	53	71	-	36	75	50	6000	1:1	20
NGT1-40/241-32/1.2-80	40	ER32	no	left	80	59	74	53	71	-	36	75	50	6000	1:1	-
NGT1-40/241-32/2.2-80	40	ER32	yes	left	80	62	74	53	71	-	36	75	50	6000	1:1	20
NGT1-40/241-25/1.2-80D	40	ER25	no	left	80	59	70	53	-	42,5	36	75	50	6000	1:1	-
NGT1-40/241-25/2.2-80D	40	ER25	yes	left	80	62	70	53	-	42,5	36	75	50	6000	1:1	20
NGT1-40/241-32/1.2-80D	40	ER32	no	left	80	59	74	53	-	42,5	36	75	50	6000	1:1	-
NGT1-40/241-32/2.2-80D	40	ER32	yes	left	80	62	74	53	-	42,5	36	75	50	6000	1:1	20

BARUFFALDI / TOEM TURRET

Offset straight drilling and milling head

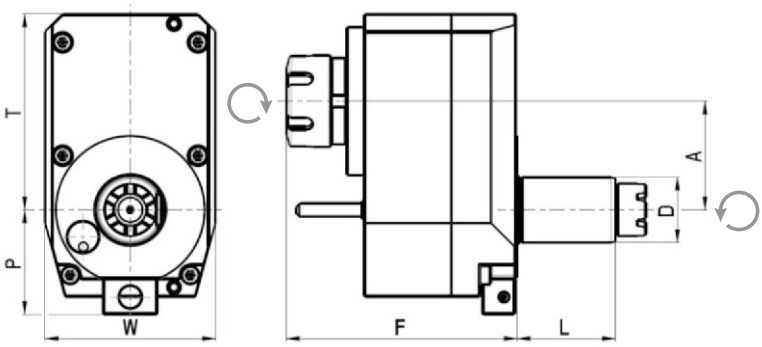

Code	D	Tool grip	Internal Cooling	Direction	A	F	L	P	T	W	Torque [Nm]	Speed [rpm]	Ratio	P [bar]
NGT1-30/341-25/1.1-50(1:2)	30	ER25	no	right	50	106	45	48	90	78	14	12000	1:2	-
NGT1-30/341-25/1.1-50(2:1)	30	ER25	no	right	50	106	45	48	90	78	40	3000	2:1	-

Offset angular drilling and milling head

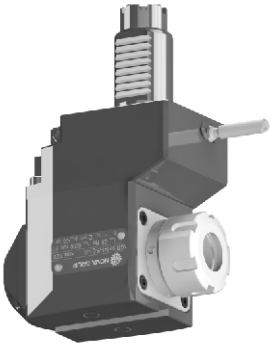

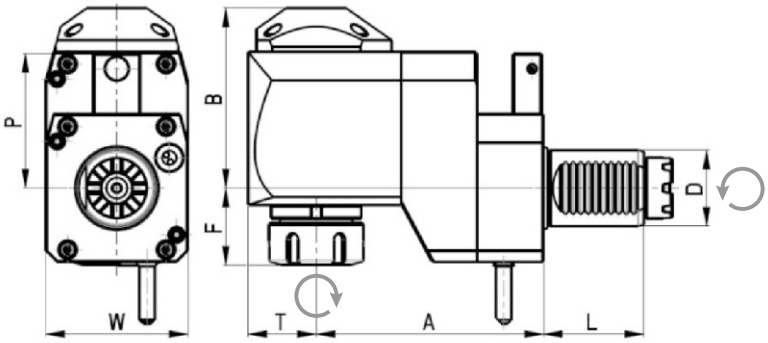

Code	D	Tool grip	IC	Direction	A	B	F	L	P	T	W	Torque [Nm]	Speed [rpm]	Ratio	P [bar]
NGT1-30/441-25/1.1-75	30	ER25	no	right	75	71	40	45	48	29	64	28	6000	1:1	-
NGT1-30/441-25/2.1-75	30	ER25	yes	right	75	74	40	45	48	29	64	28	6000	1:1	20
NGT1-40/441-25/1.1-120	40	ER25	no	right	120	92	37	53	71	36	75	50	6000	1:1	-
NGT1-40/441-25/2.1-120	40	ER25	yes	right	120	95	37	53	71	36	75	50	6000	1:1	20
NGT1-40/441-25/1.2-120	40	ER25	no	left	120	92	37	53	71	36	75	50	6000	1:1	-
NGT1-40/441-25/2.2-120	40	ER25	yes	left	120	95	37	53	71	36	75	50	6000	1:1	20
NGT1-40/441-32/1.1-120	40	ER32	no	right	120	92	41	53	71	36	75	50	6000	1:1	-
NGT1-40/441-32/2.1-120	40	ER32	yes	right	120	95	41	53	71	36	75	50	6000	1:1	20
NGT1-40/441-32/1.2-120	40	ER32	no	left	120	92	41	53	71	36	75	50	6000	1:1	-
NGT1-40/441-32/2.2-120	40	ER32	yes	left	120	95	41	53	71	36	75	50	6000	1:1	20

BARUFFALDI / TOEM TURRET

Variable angle drilling and milling head

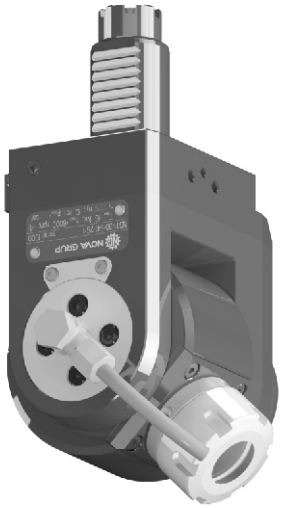

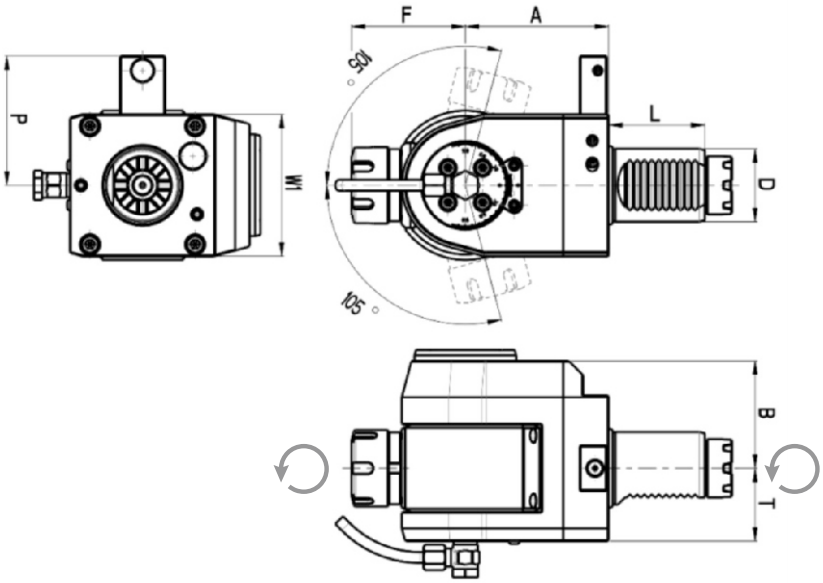

Code	D	Tool grip	IC	Direction	A	B	F	L	P	T	W1	Torque [Nm]	Speed [rpm]	Ratio	P [bar]
NGT1-30/541-16/1	30	ER16	no	right/left	79	59	43	45	48	40	64	16	6000	1:1	-
NGT1-30/541-16/2	30	ER16	yes	right/left	86	59	43	45	48	40	64	16	6000	1:1	20
NGT1-30/541-25/1	30	Er25	no	right/left	79	59	43	45	48	40	64	16	6000	1:1	-
NGT1-30/541-25/2	30	Er25	yes	right/left	86	59	43	45	48	40	64	16	6000	1:1	20
NGT1-40/541-25/1	40	ER25	no	right/left	79	59	64	53	71	40	78	16	6000	1:1	-
NGT1-40/541-25/2	40	ER25	yes	right/left	86	59	64	53	71	40	78	16	6000	1:1	20

* The straight, angular and variable toolholders can be equipped with Weldon shaft or shell-mill shaft upon request.

HAAS TURRET

Straight drilling and milling head

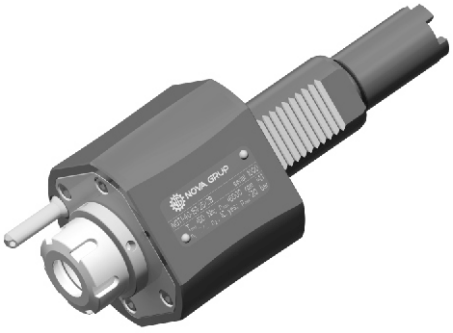

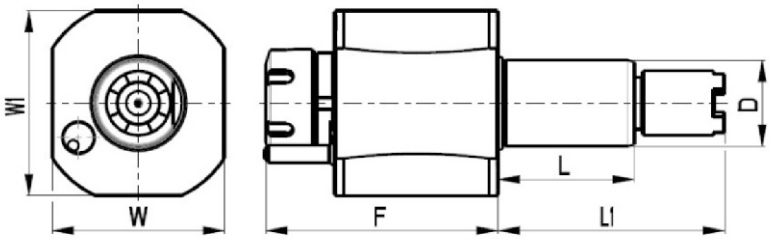

Code	D	Tool grip	IC	F	L	L1	W	W1	Torque [Nm]	Speed [rpm]	Ratio	P [bar]
NGT1-40/151-25/1A	40	ER25	no	106	64	104.85	80	86	50	6000	1:1	-
NGT1-40/151-25/2A	40	ER25	yes	106	64	104.85	80	86	50	6000	1:1	20
NGT1-40/151-32/1A	40	ER32	no	109	64	104.85	80	86	50	6000	1:1	-
NGT1-40/151-32/2A	40	ER32	yes	109	64	104.85	80	86	50	6000	1:1	20
NGT1-40/151-25/1B	40	ER25	no	106	64	117.55	80	86	50	6000	1:1	-
NGT1-40/151-25/2B	40	ER25	yes	106	64	117.55	80	86	50	6000	1:1	20
NGT1-40/151-32/1B	40	ER32	no	109	64	117.55	80	86	50	6000	1:1	-
NGT1-40/151-32/2B	40	ER32	yes	109	64	117.55	80	86	50	6000	1:1	20
NGT1-40/151-25/1C	40	ER25	no	106	64	130.25	80	86	50	6000	1:1	-
NGT1-40/151-25/2C	40	ER25	yes	106	64	130.25	80	86	50	6000	1:1	20
NGT1-40/151-32/1C	40	ER32	no	109	64	130.25	80	86	50	6000	1:1	-
NGT1-40/151-32/2C	40	ER32	yes	109	64	130.25	80	86	50	6000	1:1	20

HAAS TURRET

Angular drilling and milling head

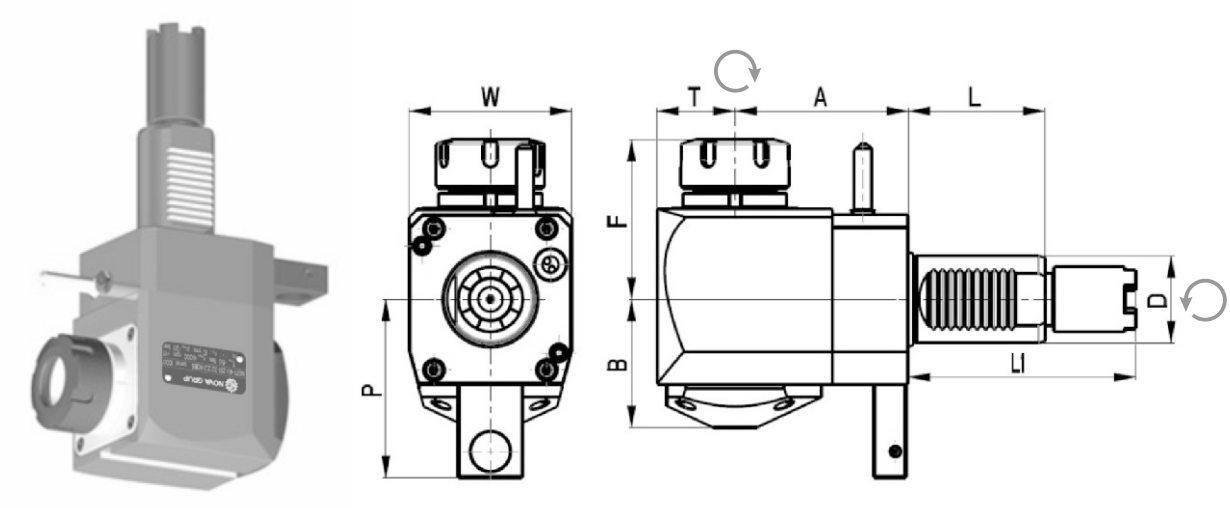

Code	D	Tool grip	IC	Direction	A	B	F	L	L1	P	T	W	Torque [Nm]	Speed [rpm]	Ratio	P [bar]
NGT1-40/251-25/1.2-80A	40	ER25	no	left	80	59	72	64	104.85	82	36	75	50	6000	1:1	-
NGT1-40/251-25/2.2-80A	40	ER25	yes	left	80	62	72	64	104.85	82	36	75	50	6000	1:1	20
NGT1-40/251-32/1.2-80A	40	ER32	no	left	80	59	75	64	104.85	82	36	75	50	6000	1:1	-
NGT1-40/251-32/2.2-80A	40	ER32	yes	left	80	62	75	64	104.85	82	36	75	50	6000	1:1	20
NGT1-40/251-25/1.2-80B	40	ER25	no	left	80	59	72	64	117.55	82	36	75	50	6000	1:1	-
NGT1-40/251-25/2.2-80B	40	ER25	yes	left	80	62	72	64	117.55	82	36	75	50	6000	1:1	20
NGT1-40/251-32/1.2-80B	40	ER32	no	left	80	59	75	64	117.55	82	36	75	50	6000	1:1	-
NGT1-40/251-32/2.2-80B	40	ER32	yes	left	80	62	75	64	117.55	82	36	75	50	6000	1:1	20
NGT1-40/251-25/1.2-80C	40	ER25	no	left	80	59	72	64	130.25	82	36	75	50	6000	1:1	-
NGT1-40/251-25/2.2-80C	40	ER25	yes	left	80	62	72	64	130.25	82	36	75	50	6000	1:1	20
NGT1-40/251-32/1.2-80C	40	ER32	no	left	80	59	75	64	130.25	82	36	75	50	6000	1:1	-
NGT1-40/251-32/2.2-80C	40	ER32	yes	left	80	62	75	64	130.25	82	36	75	50	6000	1:1	20
NGT1-40/251-25/1.2-69A	40	ER25	no	left	69	59	72	64	104.85	82	36	75	50	6000	1:1	-
NGT1-40/251-25/2.2-69A	40	ER25	yes	left	69	62	72	64	104.85	82	36	75	50	6000	1:1	20
NGT1-40/251-32/1.2-69A	40	ER32	no	left	69	59	75	64	104.85	82	36	75	50	6000	1:1	-
NGT1-40/251-32/2.2-69A	40	ER32	yes	left	69	62	75	64	104.85	82	36	75	50	6000	1:1	20
NGT1-40/251-25/1.2-69B	40	ER25	no	left	69	59	72	64	117.55	82	36	75	50	6000	1:1	-
NGT1-40/251-25/2.2-69B	40	ER25	yes	left	69	62	72	64	117.55	82	36	75	50	6000	1:1	20
NGT1-40/251-32/1.2-69B	40	ER32	no	left	69	59	75	64	117.55	82	36	75	50	6000	1:1	-
NGT1-40/251-32/2.2-69B	40	ER32	yes	left	69	62	75	64	117.55	82	36	75	50	6000	1:1	20
NGT1-40/251-25/1.2-69C	40	ER25	no	left	69	59	72	64	130.25	82	36	75	50	6000	1:1	-
NGT1-40/251-25/2.2-69C	40	ER25	yes	left	69	62	72	64	130.25	82	36	75	50	6000	1:1	20
NGT1-40/251-32/1.2-69C	40	ER32	no	left	69	59	75	64	130.25	82	36	75	50	6000	1:1	-
NGT1-40/251-32/2.2-69C	40	ER32	yes	left	69	62	75	64	130.25	82	36	75	50	6000	1:1	20

HAAS TURRET

Angular drilling and milling head - SAME DIRECTION

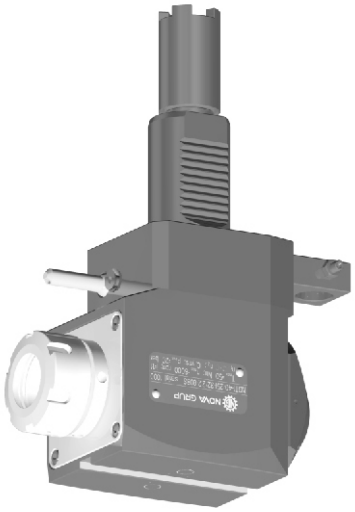

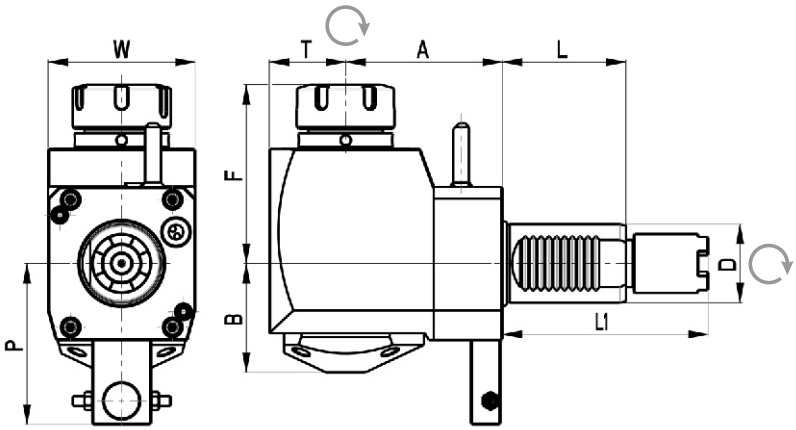

Code	D	Tool	IC	Direction	A	B	F	L	L1	P	T	W	Torque [Nm]	Speed [rpm]	Ratio	P [bar]
NGT1-40/251-32/1.2-69AS	40	ER32	no	left	69	56	91	64	104.85	82	36	75	50	6000	1:1	-
NGT1-40/251-32/2.2-69AS	40	ER32	yes	left	69	56	91	64	104.85	82	36	75	50	6000	1:1	20
NGT1-40/251-32/1.2-69BS	40	ER32	no	left	69	56	91	64	117.55	82	36	75	50	6000	1:1	-
NGT1-40/251-32/2.2-69BS	40	ER32	yes	left	69	56	91	64	117.55	82	36	75	50	6000	1:1	20
NGT1-40/251-32/1.2-69CS	40	ER32	no	left	69	56	91	64	130.25	82	36	75	50	6000	1:1	-
NGT1-40/251-32/2.2-69CS	40	ER32	yes	left	69	56	91	64	130.25	82	36	75	50	6000	1:1	20
NGT1-40/251-32/1.2-80AS	40	ER32	no	left	80	56	91	64	104.85	82	36	75	50	6000	1:1	-
NGT1-40/251-32/2.2-80AS	40	ER32	yes	left	80	56	91	64	104.85	82	36	75	50	6000	1:1	20
NGT1-40/251-32/1.2-80BS	40	ER32	no	left	80	56	91	64	117.55	82	36	75	50	6000	1:1	-
NGT1-40/251-32/2.2-80BS	40	ER32	yes	left	80	56	91	64	117.55	82	36	75	50	6000	1:1	20
NGT1-40/251-32/1.2-80CS	40	ER32	no	left	80	56	91	64	130.25	82	36	75	50	6000	1:1	-
NGT1-40/251-32/2.2-80CS	40	ER32	yes	left	80	56	91	64	130.25	82	36	75	50	6000	1:1	20

HAAS TURRET

Variable angle drilling and milling head

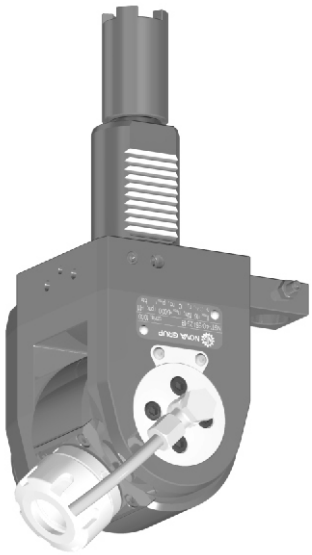

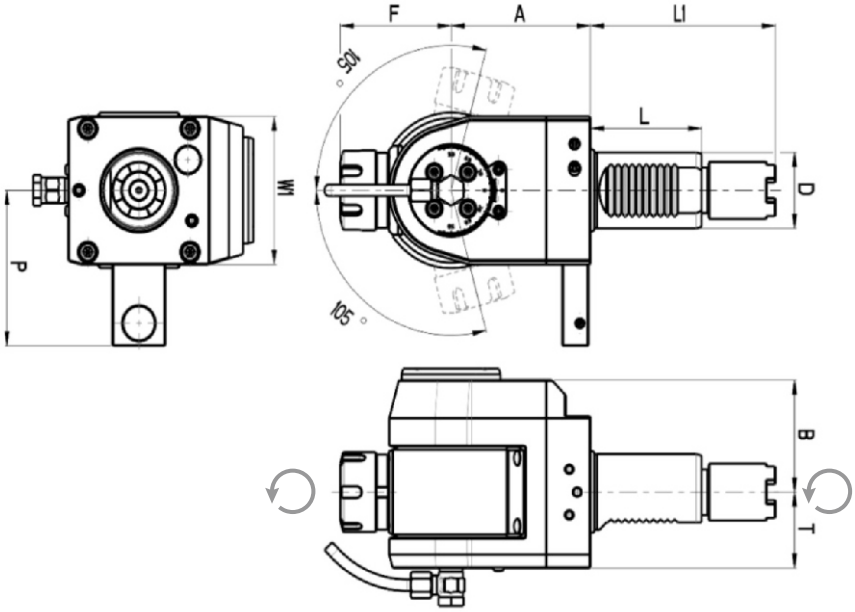

Code	D	Tool grip	IC	Direction	A	B	F	L	L1	P	T	W1	Torque [Nm]	Speed [rpm]	Ratio	P [bar]
NGT1-40/551-25.1A	40	ER25	no	right/left	79	59	64	64	104.85	82	40	78	16	6000	1:1	-
NGT1-40/551-25.1A	40	ER25	yes	right/left	86	59	64	64	104.85	82	40	78	16	6000	1:1	20
NGT1-40/551-25.1B	40	ER25	no	right/left	79	59	64	64	117.55	82	40	78	16	6000	1:1	-
NGT1-40/551-25.2B	40	ER25	yes	right/left	86	59	64	64	117.55	82	40	78	16	6000	1:1	20
NGT1-40/551-25.1C	40	ER25	no	right/left	79	59	64	64	130.25	82	40	78	16	6000	1:1	-
NGT1-40/551-25.2C	40	ER25	yes	right/left	86	59	64	64	130.25	82	40	78	16	6000	1:1	20

* The straight, angular and variable toolholders can be equipped with Weldon shaft or shell-mill shaft upon request.

HAAS TURRET

Offset angular drilling and milling head

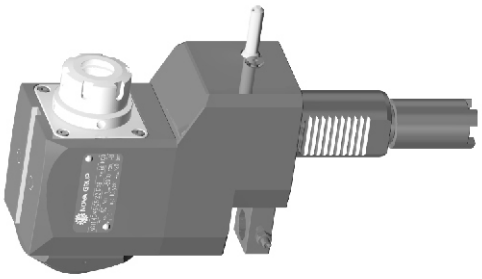

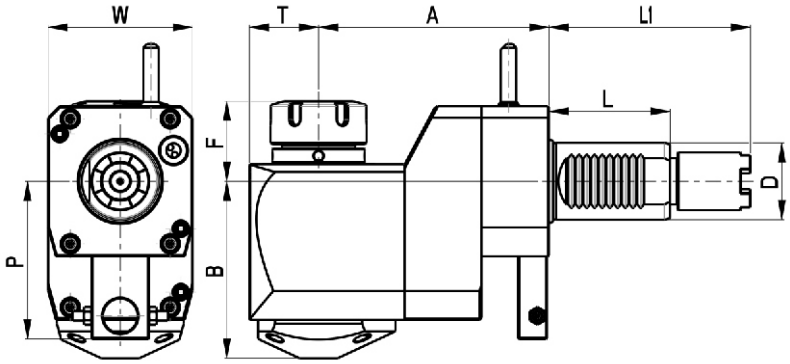

Code	D	Tool grip	IC	Direction	A	B	F	L	L1	P	T	W	Torque [Nm]	Speed [rpm]	Ratio	P [bar]
NGT1-40/451-25/1.2-120A	40	ER25	no	left	120	92	39	63	104.85	82	36	75	50	6000	1:1	-
NGT1-40/451-25/2.2-120A	40	ER25	yes	left	120	95	39	63	104.85	82	36	75	50	6000	1:1	20
NGT1-40/451-32/1.2-120A	40	ER32	no	left	120	92	42	63	104.85	82	36	75	50	6000	1:1	-
NGT1-40/451-32/2.2-120A	40	ER32	yes	left	120	95	42	63	104.85	82	36	75	50	6000	1:1	20
NGT1-40/451-25/1.2-120B	40	ER25	no	left	120	92	39	63	117.55	82	36	75	50	6000	1:1	-
NGT1-40/451-25/2.2-120B	40	ER25	yes	left	120	95	39	63	117.55	82	36	75	50	6000	1:1	20
NGT1-40/451-32/1.2-120B	40	ER32	no	left	120	92	42	63	117.55	82	36	75	50	6000	1:1	-
NGT1-40/451-32/2.2-120B	40	ER32	yes	left	120	95	42	63	117.55	82	36	75	50	6000	1:1	20
NGT1-40/451-25/1.2-120C	40	ER25	no	left	120	92	39	63	130.25	82	36	75	50	6000	1:1	-
NGT1-40/451-25/2.2-120C	40	ER25	yes	left	120	95	39	63	130.25	82	36	75	50	6000	1:1	20
NGT1-40/451-32/1.2-120C	40	ER32	no	left	120	92	42	63	130.25	82	36	75	50	6000	1:1	-
NGT1-40/451-32/2.2-120C	40	ER32	yes	left	120	95	42	63	130.25	82	36	75	50	6000	1:1	20

OKUMA

Straight drilling and milling head

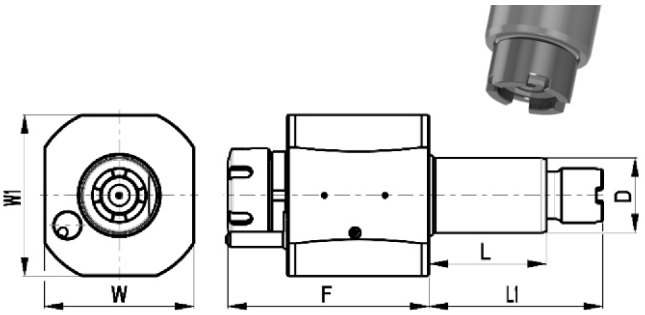

Code	D	Tool grip	IC	F	L	L1	W	W1	Torque [Nm]	Speed [rpm]	Ratio	P [bar]
NGT1-30/151-25/1JA	30	ER25	no	89	55	69	64	68	28	6000	1:1	-
NGT1-30/151-25/2JA	30	ER25	yes	89	55	69	64	68	28	6000	1:1	20
NGT1-40/151-25/1JA	40	ER25	no	105	64	93	80	86	50	6000	1:1	-
NGT1-40/151-25/2JA	40	ER25	yes	105	64	93	80	86	50	6000	1:1	20
NGT1-40/151-32/1JA	40	ER32	no	108	64	93	80	86	50	6000	1:1	-
NGT1-40/151-32/2JA	40	ER32	yes	108	64	93	80	86	50	6000	1:1	20
NGT1-40/151-25/1JB	40	ER25	no	105	64	101	80	86	50	6000	1:1	-
NGT1-40/151-25/2JB	40	ER25	yes	105	64	101	80	86	50	6000	1:1	20
NGT1-40/151-32/1JB	40	ER32	no	108	64	101	80	86	50	6000	1:1	-
NGT1-40/151-32/2JB	40	ER32	yes	108	64	101	80	86	50	6000	1:1	20

Angular drilling and milling head

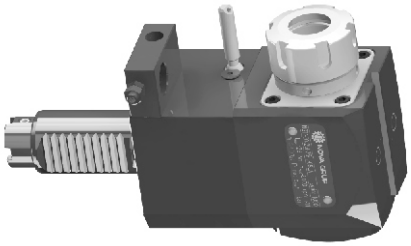

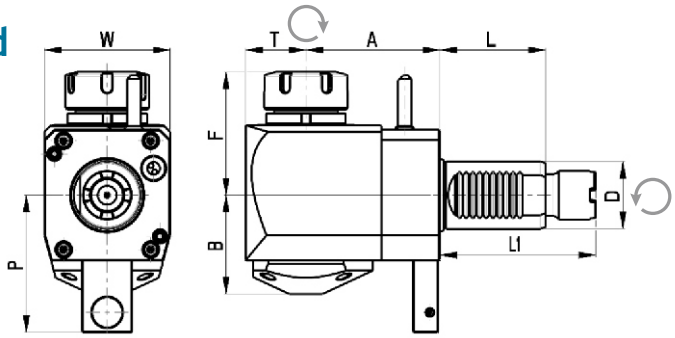

Code	D	Tool grip	IC	Direction	A	B	F	L	L1	P	T	W	Torque [Nm]	Speed [rpm]	Ratio	P [bar]
NGT1-30/251-25/1.1-85JA	30	ER25	no	right	85	48	64	55	69	-	29	64	28	6000	1:1	-
NGT1-30/251-25/2.1-85JA	30	ER25	yes	right	85	51	64	55	69	-	29	64	28	6000	1:1	20
NGT1-30/251-25/2.2-55JB	30	ER25	no	left	55	48	64	55	69	72	29	64	28	6000	1:1	-
NGT1-30/251-25/2.2-55JB	30	ER25	yes	left	55	51	64	55	69	72	29	64	28	6000	1:1	20
NGT1-40/251-25/1.2-80JA	40	ER25	no	left	80	59	70	64	93	82	36	75	50	6000	1:1	-
NGT1-40/251-25/2.2-80JA	40	ER25	yes	left	80	62	70	64	93	82	36	75	50	6000	1:1	20
NGT1-40/251-32/1.2-80JA	40	ER32	no	left	80	59	74	64	93	82	36	75	50	6000	1:1	-
NGT1-40/251-32/2.2-80JA	40	ER32	yes	left	80	62	74	64	93	82	36	75	50	6000	1:1	20
NGT1-40/251-25/1.2-80JB	40	ER25	no	left	80	59	70	64	101	82	36	75	50	6000	1:1	-
NGT1-40/251-25/2.2-80JB	40	ER25	yes	left	80	62	70	64	101	82	36	75	50	6000	1:1	20
NGT1-40/251-32/1.2-80JB	40	ER32	no	left	80	59	74	64	101	82	36	75	50	6000	1:1	-
NGT1-40/251-32/2.2-80JB	40	ER32	yes	left	80	62	74	64	101	82	36	75	50	6000	1:1	20
NGT1-40/251-25/1.1-80JD	40	ER25	no	right	80	59	70	64	93	-	36	75	50	6000	1:1	-
NGT1-40/251-25/2.1-80JD	40	ER25	yes	right	80	62	70	64	93	-	36	75	50	6000	1:1	20
NGT1-40/251-32/1.1-80JD	40	ER32	no	right	80	59	74	64	93	-	36	75	50	6000	1:1	-
NGT1-40/251-32/2.1-80JD	40	ER32	yes	right	80	62	74	64	93	-	36	75	50	6000	1:1	20

OKUMA

Angular drilling and milling head - SAME DIRECTION

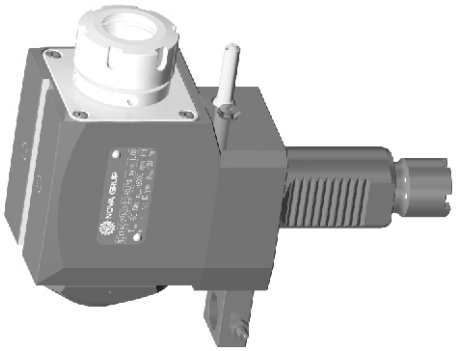

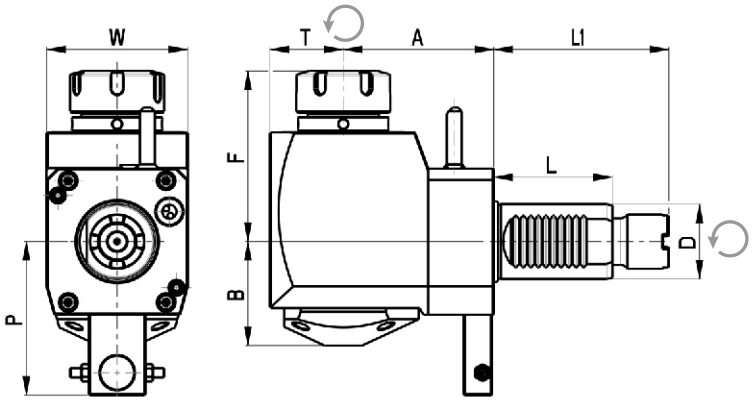

Code	D	Tool grip	IC	Direction	A	B	F	L	L1	P	T	W	Torque [Nm]	Speed [rpm]	Ratio	P [bar]
NGT1-40/251-32/1.2-80JAS	40	ER32	no	left	80	56	91	63	93	82	36	75	50	6000	1:1	-
NGT1-40/251-32/2.2-80JAS	40	ER32	yes	left	80	56	91	63	93	82	36	75	50	6000	1:1	-

Offset angular drilling and milling head

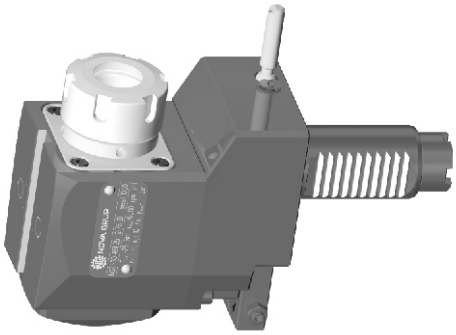

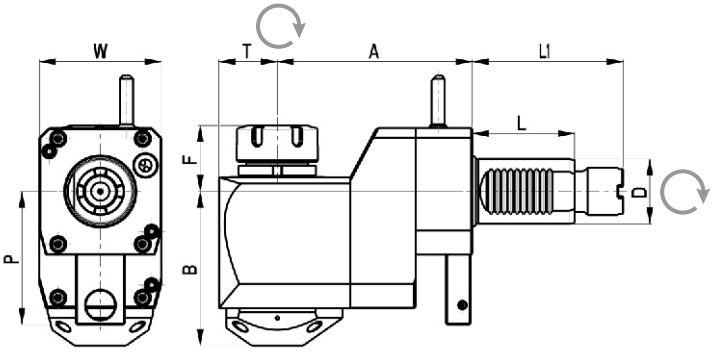

Code	D	Tool grip	IC	Direction	A	B	F	L	L1	P	T	W	Torque [Nm]	Speed [rpm]	Ratio	P [bar]
NGT1-30/451-25/1.2-75JB	30	ER25	no	left	75	71	40	55	69	72	29	64	28	6000	1:1	-
NGT1-30/451-25/2.2-75JB	30	ER25	yes	left	75	74	40	55	69	72	29	64	28	6000	1:1	20
NGT1-40/451-25/1.2-120JA	40	ER25	no	left	120	92	37	64	93	82	36	75	50	6000	1:1	-
NGT1-40/451-25/2.2-120JA	40	ER25	yes	left	120	95	37	64	93	82	36	75	50	6000	1:1	20
NGT1-40/451-32/1.2-120JA	40	ER32	no	left	120	92	41	64	93	82	36	75	50	6000	1:1	-
NGT1-40/451-32/2.2-120JA	40	ER32	yes	left	120	95	41	64	93	82	36	75	50	6000	1:1	20
NGT1-40/451-25/1.2-120JB	40	ER25	no	left	120	92	37	64	101	82	36	75	50	6000	1:1	-
NGT1-40/451-25/2.2-120JB	40	ER25	yes	left	120	95	37	64	101	82	36	75	50	6000	1:1	20
NGT1-40/451-32/1.2-120JB	40	ER32	no	left	120	92	41	64	101	82	36	75	50	6000	1:1	-
NGT1-40/451-32/2.2-120JB	40	ER32	yes	left	120	95	41	64	101	82	36	75	50	6000	1:1	20

OKUMA

Variable angular drilling and milling head

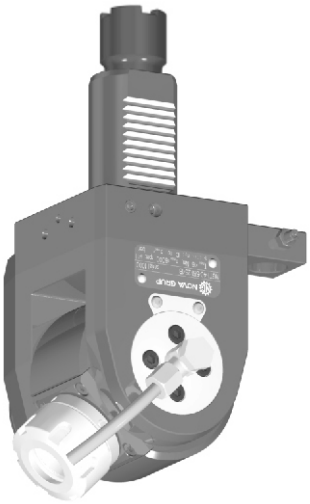

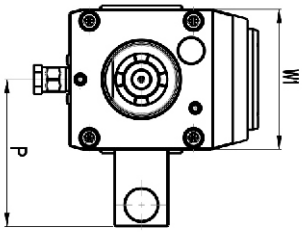

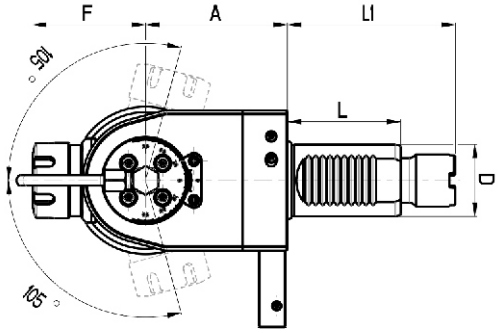

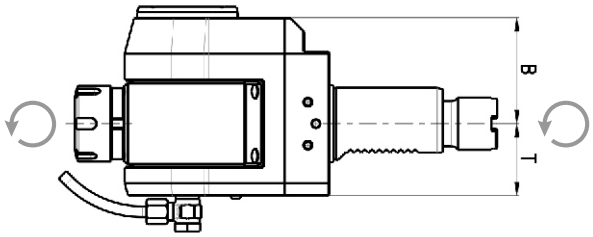

Code	D	Tool grip	IC	Direction	A	B	F	L	L1	P	T	W1	Torque [Nm]	Speed [rpm]	Ratio	P [bar]
NGT1-30/551-16.1JA	30	ER16	no	right/left	79	59	43	55	69	57	40	64	16	6000	1:1	-
NGT1-30/551-16.2JA	30	ER16	yes	right/left	86	59	43	55	69	57	40	64	16	6000	1:1	20
NGT1-40/551-25.1JA	40	ER25	no	right/left	79	59	64	64	93	82	40	78	16	6000	1:1	-
NGT1-40/551-25.2JA	40	ER25	yes	right/left	86	59	64	64	93	82	40	78	16	6000	1:1	20
NGT1-40/551-25.1JB	40	ER25	no	right/left	79	59	64	64	101	82	40	78	16	6000	1:1	-
NGT1-40/551-25.2JB	40	ER25	yes	right/left	86	59	64	64	101	82	40	78	16	6000	1:1	20

FIXED TOOLHOLDERS FOR CNC LATHES

DIN 69880

Radial holder, right hand, short

B1

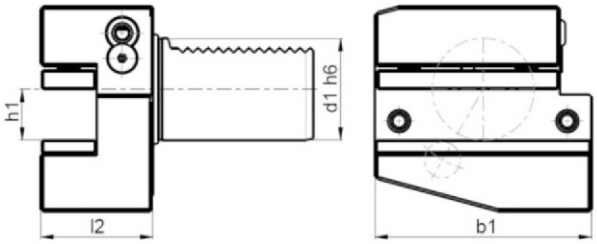

Code	d1	h1	l2	b1
NGT B1-30X20X40	30	16/20	40	70
NGT B1-40X25X44	40	20/25	44	85

Radial holder, left hand, short

B2

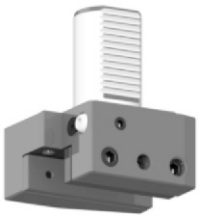

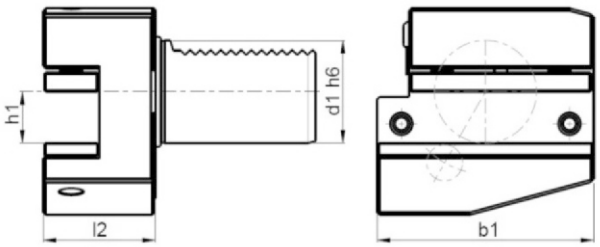

Code	d1	h1	l2	b1
NGT B2-30X20X40	30	16/20	40	70
NGT B2-40X25X44	40	20/25	44	85

Radial holder, upside-down, right hand, short

B3

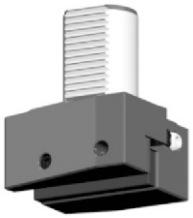

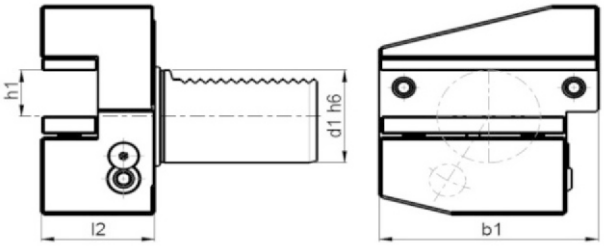

Code	d1	h1	l2	b1
NGT B3-30X20X40	30	16/20	40	70
NGT B3-40X25X44	40	20/25	44	85

FIXED TOOLHOLDERS FOR CNC LATHES

DIN 69880

Radial holder, upside-down, left hand, short

B4

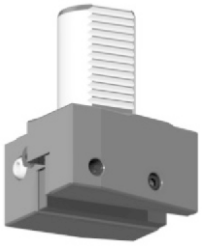

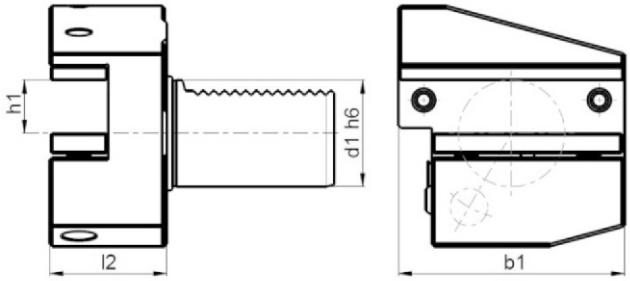

Code	d1	H1	l2	b1
NGT B4-30X20X40	30	16/20	40	70
NGT B4-40X25X44	40	20/25	44	85

Radial holder, left hand, long

B6

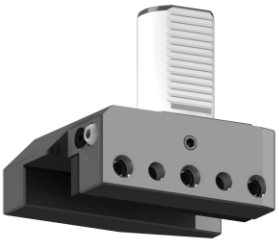

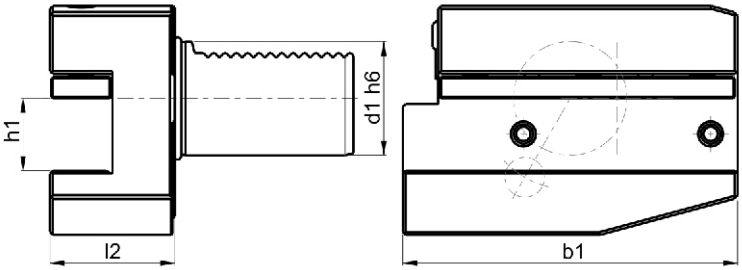

Code	d1	h1	l2	b1
NGT B6-40X44	40	20	44	118

Radial holder, upside-down, left hand, long

B8

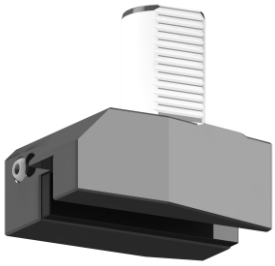

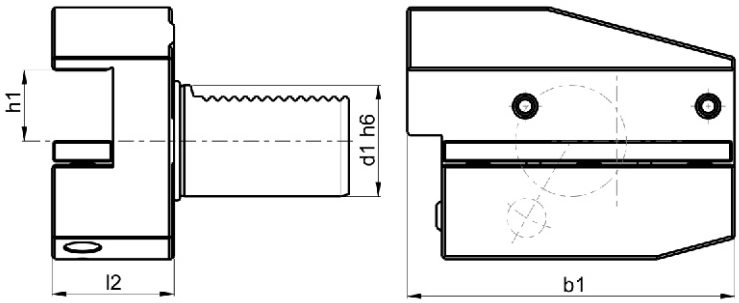

Code	d1	h1	l2	b1
NGT B8-40X44	40	20	44	118

FIXED TOOLHOLDERS FOR CNC LATHES

DIN 69880

Axial holder, right hand

C1

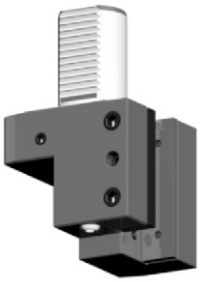

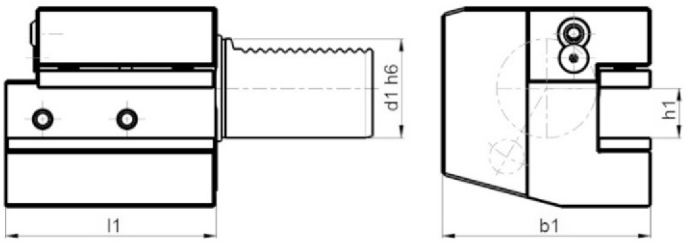

Code	d1	h1	l2	b1
NGT C1-30X20X70	30	16/20	70	70
NGT C1-40X25X85	40	20/25	85	85

Axial holder, left hand

C2

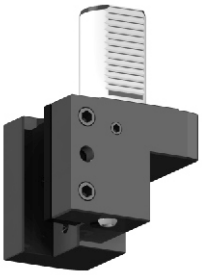

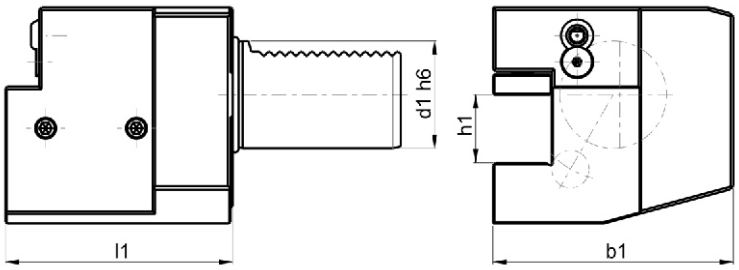

Code	d1	h1	l2	b1
NGT C2-40X25X85	40	20	85	90

Axial holder, overhead left, short

C4

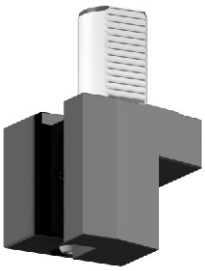

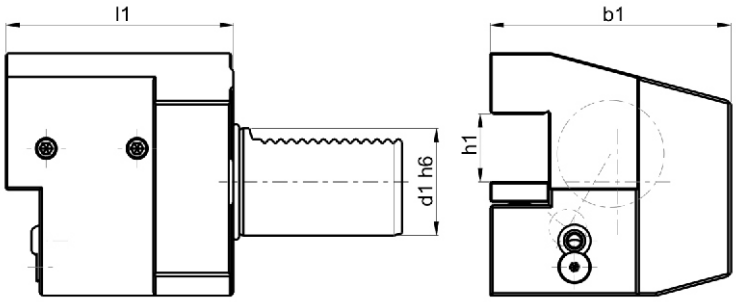

Code	d1	h1	l2	b1
NGT C4-40X85	40	20	85	90

FIXED TOOLHOLDERS FOR CNC LATHES

DIN 69880

Holder for indexable insert drills with internal coolant

E1

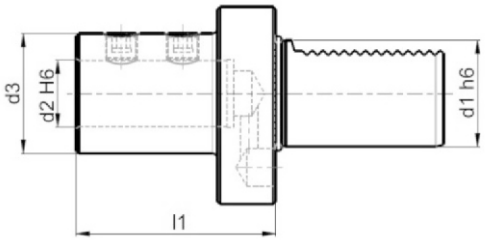

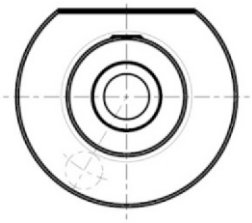

Code	d1	d2	l2	d3
NGT E1-30X25	30	25	71	45
NGT E1-30X32	30	32	75	52
NGT E1-40X25	40	25	71	45
NGT E1-40X32	40	32	75	52
NGT E1-40X40	40	40	90	65

Boring bar holder with internal coolant

E2

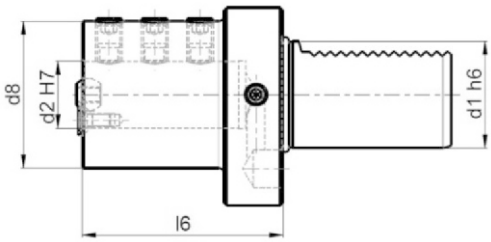

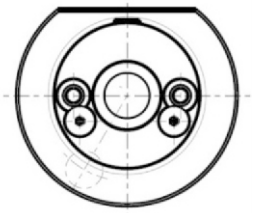

Code	d1	d2	l6	d8
NGT E2-30X10	30	10	60	55
NGT E2-30X12	30	12	60	55
NGT E2-30X16	30	16	60	55
NGT E2-30X20	30	20	60	55
NGT E2-30X25	30	25	60	55
NGT E2-30X30	30	30	60	55
NGT E2-30X32	30	32	75	68
NGT E2-40X9	40	9	75	55

Code	d1	d2	l6	d8
NGT E2-40X10	40	10	75	55
NGT E2-40X12	40	12	75	55
NGT E2-40X16	40	16	75	55
NGT E2-40X20	40	20	75	55
NGT E2-40X25	40	25	75	55
NGT E2-40X30	40	30	75	55
NGT E2-40X32	40	32	75	83
NGT E2-40X40	40	40	90	83

FIXED TOOLHOLDERS FOR CNC LATHES

DIN 69880

Collet chuck for collets - ER type, with internal coolant

E4

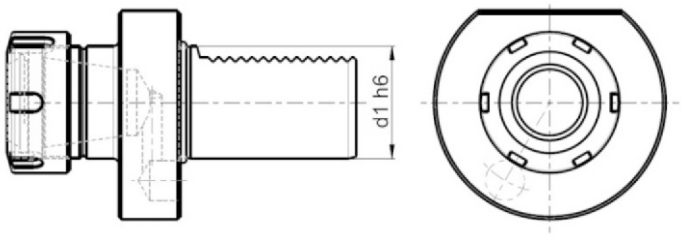

Code	d1	Tool grip
NGT E4-30X25	30	ER25
NGT E4-30X32	30	ER32
NGT E4-40X32	40	ER32
NGT E4-40X40	40	ER40

Morse taper holder, with internal coolant

F

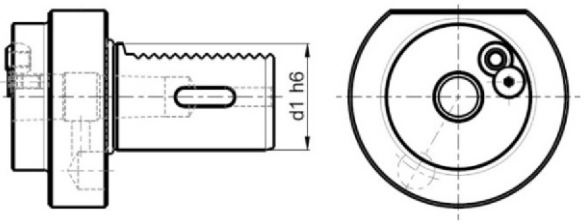

Code	d1	Tool grip
NGT F40-MT2	40	2
NGT F40-MT3	40	3
NGT F40-MT4	40	4

Toolholder for cut off tools adjustable in height, right

CR

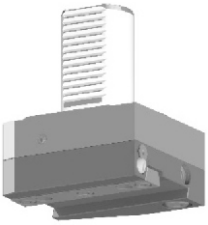

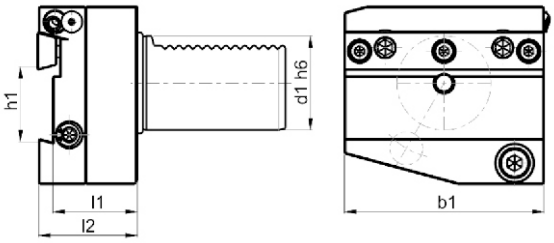

Code	d1	h1	l1	l2	B1
NGT CR-30X26	30	26	36	42	70
NGT CR-40X32	40	32	36	42	85

FIXED TOOLHOLDERS FOR CNC LATHES

DIN 69880

Bar puller

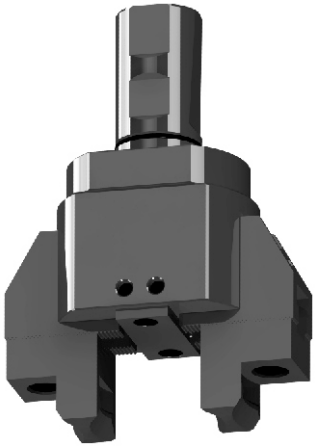

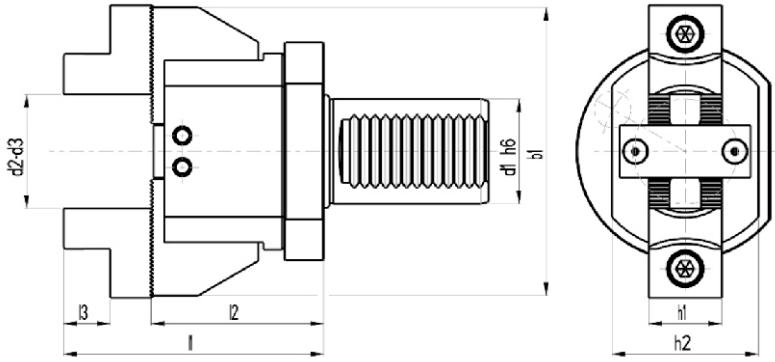

Code	d1	d2	d3	h1	h2	l1	l2	l3	b1
NGT BP-20	20	6-56	56-110	28	56	100	66	18	110
NGT BP-30	30	6-56	56-110	28	56	100	66	18	110
NGT BP-40	40	6-56	56-110	28	56	100	66	18	110
NGT BP-50	50	6-56	56-110	28	56	100	66	18	110
NGT BP-32	Weldon 32	6-56	56-110	28	56	100	66	18	110
NGT BP-40	Weldon 40	6-56	56-110	28	56	100	66	18	110

ACCESSORIES

Set of collets ER25-40 in wooden box

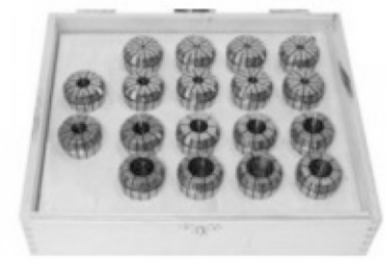

ER	Code	Range	Collets quantity
ER25	NGT ER25.KPL.15TUL	2-16	15
ER32	NGT ER32.KPL.18TUL	3-20	18
ER40	NGT ER40.KPL.23TUL	4-26	23

Wrenches for standard nut

Code	Description
NGT925CHVST	WRENCHES FOR ER 25 STANDARD
NGT932CHVST	WRENCHES FOR ER 32 STANDARD
NGT940CHVST	WRENCHES FOR ER 40 STANDARD

Code	Description
NGT925CHVOC	WRENCHES WITH SIDE GRIP 25
NGT932CHVOC	WRENCHES WITH SIDE GRIP 32
NGT940CHVOC	WRENCHES WITH SIDE GRIP 40

NGV PRECISION VICES & SYNCHRO TAPPING HOLDER

Precision machine vice NGV.MM.125
Precision machine vice NGV.M.125
Precision centric vice NGV.MC.125
Synchro tapping holder DIN 1835 B+E

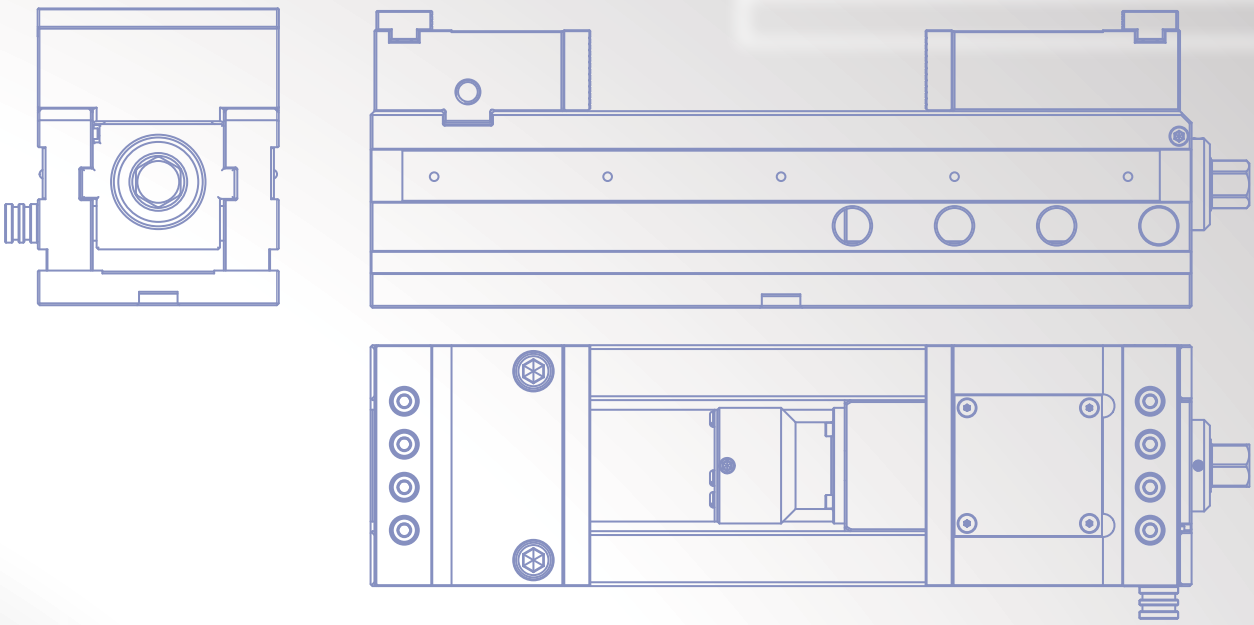

Precision Centric Vice
NGV.MC.125

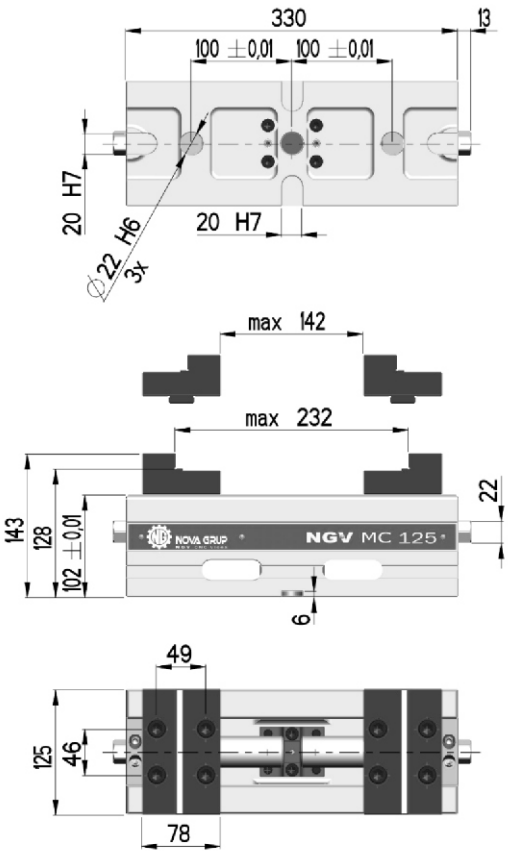

	Admissible
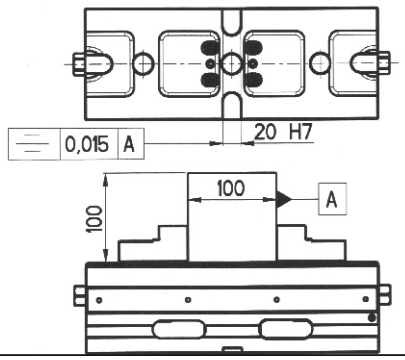	0,015mm
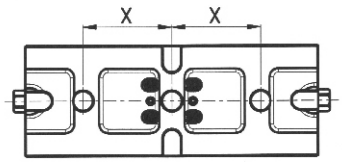	X:100±0,01mm
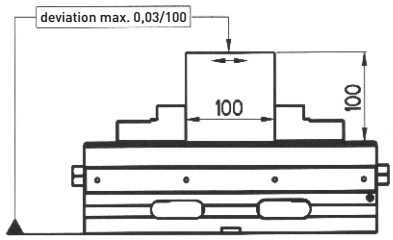	0,03mm

Max. force: *3500 kgf*

Jaw width: *125 mm*

Amplification: *no*

Type: *Precision centric vice*

Accessories included:
one pair serrated jaws
incl. clamping brackets, eye bolts,
keys and t-nuts, hand crank.

Packing mode: wooden box.

Precision Machine Vice

NGV.M.125

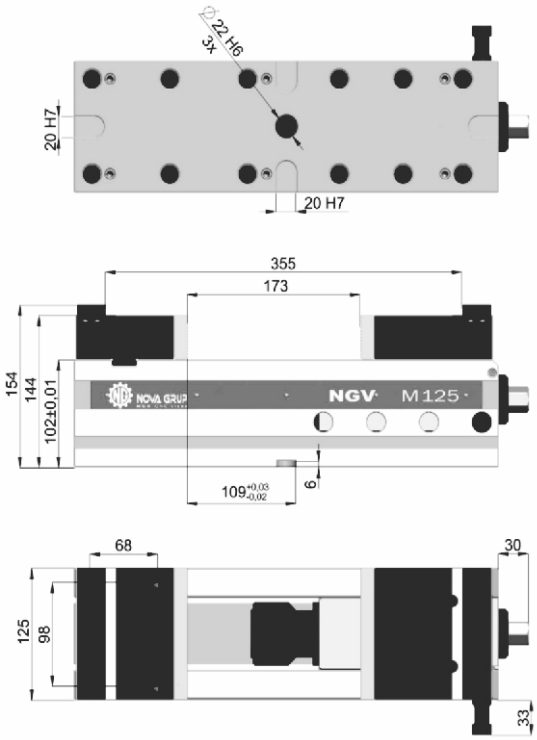

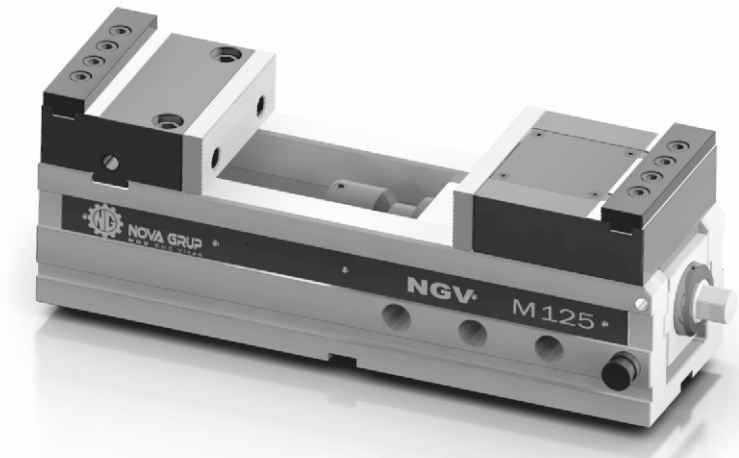

Max. force: *4000 kgf*

Max. opening: *355 mm*

Jaw width: *125 mm*

Amplification: *mechanic*

Type: *precision machine vice*

Accessories included:
one pair serrated jaws,
one pair double serrated rod weal incl. clamping brackets, eye bolts,
keys and t-nuts, hand crank with extension.
Packing mode: wooden box.

	Admissible
deviation max. 0,01/100 — 100	0,01mm
deviation max. 0,02/210 — 210	0,02mm
0,02/100 — 100	0,02mm
// 0,005/100	0,005
H, H, X	H=144,01-144,05mm X=108,98-109,03mm
Y	Y=20-20.021mm

Precision Machine Vice
NGV.MM.125

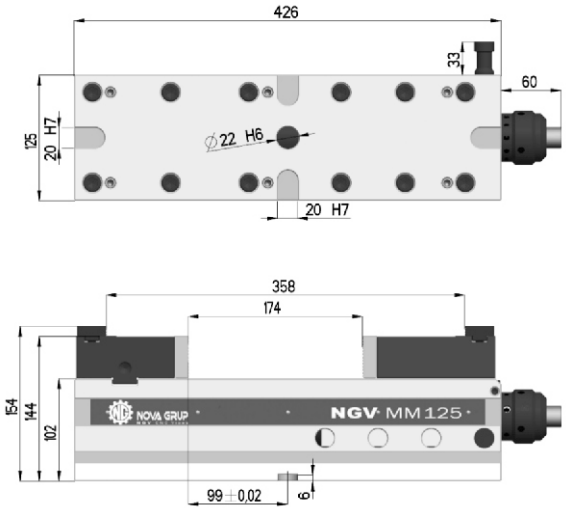

Max. force: *4000 kgf*

Max. opening: *358 mm*

Jaw width: *125 mm*

Amplification: *mechanic*

Type: *NC vice*

Accessories included:
one pair serrated jaws,
one pair double serrated rod weal
incl. clamping brackets, eye bolts,
keys and t-nuts, hand crank
with extension.

Packing mode: wooden box.

	Admissible
deviation max. 0,01/100 — 100	0,01mm
deviation max. 0,02/210 — 210	0,02mm
⊥ 0,02/100 — 100	0,02mm
// 0,005/100	0,005mm
H	H=144,01-144,05mm
X	X=108,98-109,03mm
Y	Y=20-20,021mm
Clamping force	4 +0,5 Tf

Vice Accessories

Name	Picture / dimensions	Article No.	NGV MM125	NGV M125	NGV MC125
Serrated jaw	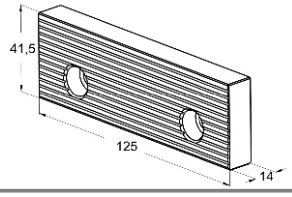	AMMH1.1.00.1 (16MnCr5)	✓	✓	✓
Double serrated jaw	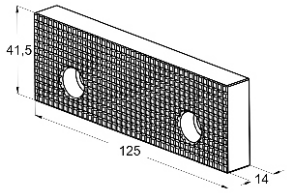	AMMH1.2.00.1 (16MnCr5)	✓	✓	✓
Prismatic jaw	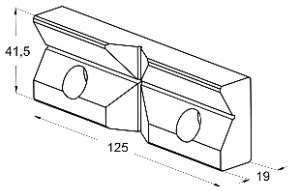	AMMH1.3.00.1 (16MnCr5)	✓	✓	✓
Step jaw	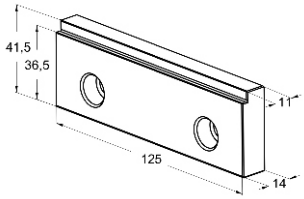	AMMH1.4.00.1 (16MnCr5)	✓	✓	✓
Smooth jaw	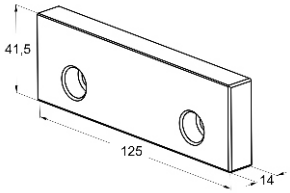	AMMH1.5.00.1 (16MnCr5)	✓	✓	✓
Pull-down jaw	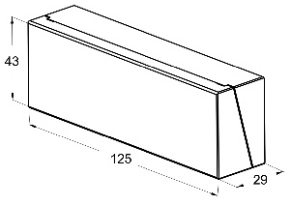	AMMH1.6.00.0 (16MnCr5)	✓	✓	✓
Gripper Step jaw	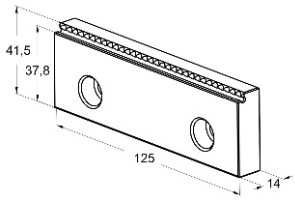	AMMH1.21.0 (90MnCrV8)	✓	✓	✓

Vice Accessories

Name	Picture / dimensions	Article No.	NGV MM125	NGV M125	NGV MC125
Gripper Step jaw	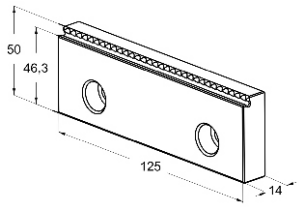	AMMH1.23.0 (90MnCrV8)	✓	✓	✓
Reversible double serrated -step jaw	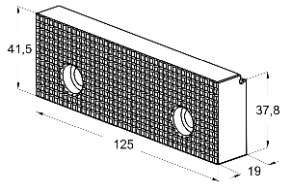	AMMH1.35.0 (16MnCr5)	✓	✓	✓
Auxiliary jaw, double serrated	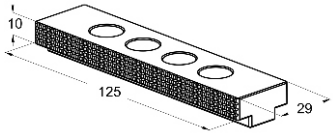	AMMM1.3.0 (16MnCr5)	✓	✓	
Fixing set T-slot 14/M12	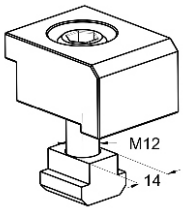	AMMM1.3.0.A	✓	✓	✓
Fixing set T-slot 16/M14	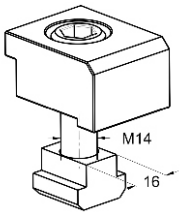	AMMM1.3.0.B	✓	✓	✓
Fixing set T-slot 18/M16	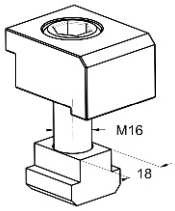	AMMM1.3.0.C	✓	✓	✓
Aligning (positioning) Key, size 14 mm, for T-slots table	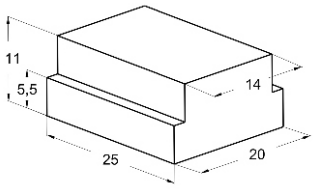	AMMH1.15.0	✓	✓	✓

Vice Accessories

Name	Picture / dimensions	Article No.	NGV MM125	NGV M125	NGV MC125
Aligning (positioning) Key, size 16 mm, for T-slots table	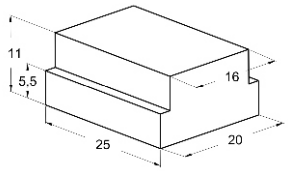	AMMH1.13.0	✓	✓	✓
Aligning (positioning) Key, size 18 mm, for T-slots table	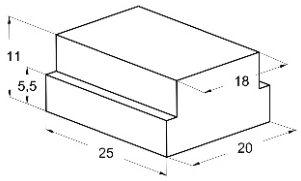	AMMH1.16.0	✓	✓	✓
Stopper	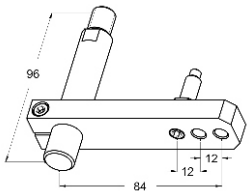	AMMH1.9.00. 0	✓	✓	
Hand crank, turnable handle	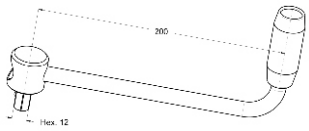	AMMM1.1.00.0.S	✓		
Hand crank with extension	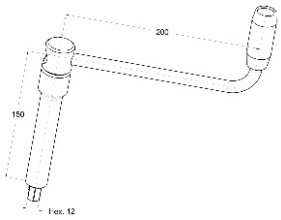	AMMM1.1.00.0	✓		
Extension hexagon 12	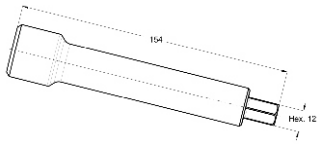	AMMM1.1.08.0.S	✓		
Hand crank	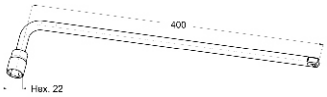	AMM.3.00.0		✓	✓
Extension hand crank	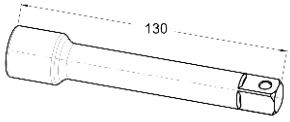	64 1020/130		✓	

Synchro Tapping Holders

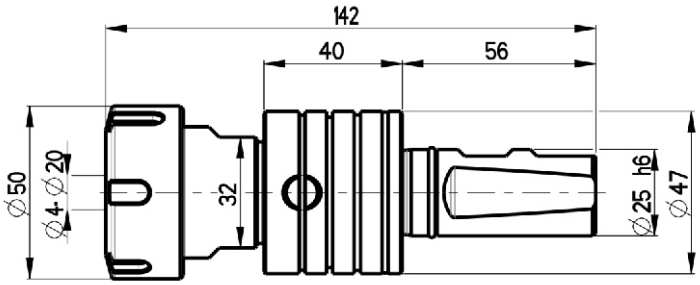

Product	Description	Collet	Tap Capacity	Work pressure [bar]	Order No.
Synchro Tapping Holder	DIN 1835 B+E Ø25	ER 32-GB	M4-M27	50	NGT ST1-25x32

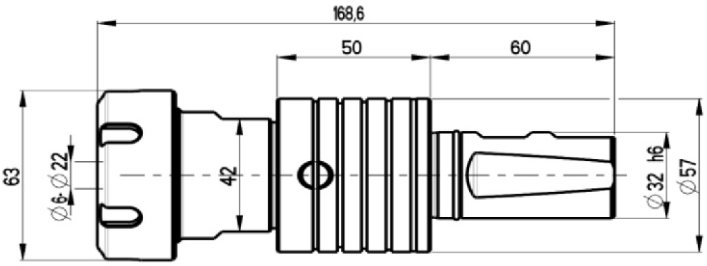

Product	Description	Collet	Tap Capacity	Work pressure [bar]	Order No.
Synchro Tapping Holder	DIN 1835 B+E Ø32	ER 40-GB	M6-M30	50	NGT ST4-32x40

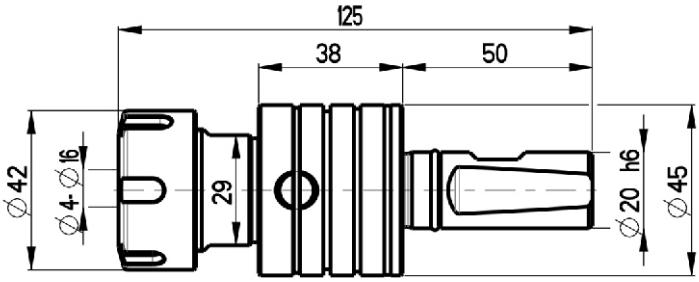

Product	Description	Collet	Tap Capacity	Work pressure [bar]	Order No.
Synchro Tapping Holder	DIN 1835 B+E Ø20	ER 25-GB	M4-M20	50	NGT ST5-20x25

NOVA GRUP
gearing up your business

SC NOVA GRUP SRL
Str. Victoriei Nr. 22, 515600 Cugir, jud. Alba
Tel.: +40 258 755 727, +40 372 744 744, +40 358 401 712
Fax: +40 258 755 724
E-mail: office@novagrup.ro

www.novagrup.ro

Distributed by: